Haier SERVICE MANUAL

Packaged Type

DC Inverter

Model No. AP24DF1HRA

⚠WARNING

This service information is designed for experienced repair technicians only and is not designed for use by the general public.
It does not contain warnings or cautions to advise non-technical individuals of potential dangers in attempting to service a product.
Products powered by electricity should be serviced or repaired only by experienced professional technicians. Any attempt to service or Repair the product or products dealt with in this service information by anyone else could result in serious injury or death

Haier Group **Version：V1** **Date：2017-02-22**

Contents

1. Introduction..... 1
2. Features 7
3. Specifications 8
4. Sensors list..... 9
5. Piping diagrams.....10
6. Printed Circuit Board Connector Wiring Diagram.....11
7. Functions and Control 14
8. System configuration.....25
9. Dimensional drawings 42
10. Conter of gravity 42
11. Service Diagnosis.....43
12. Circuit diagrams 59

1 Introduction

1.1 Model name explanation

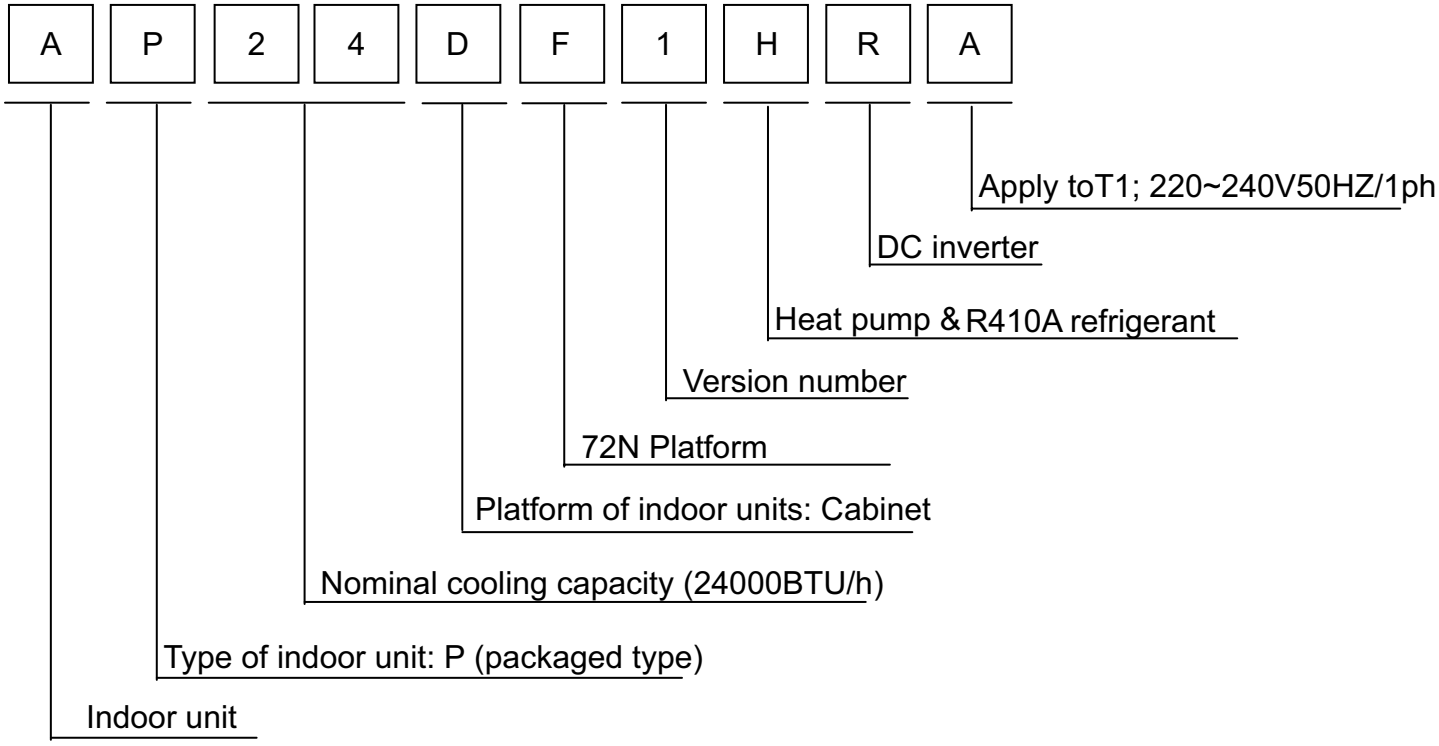

1.2 Safety Cautions

Be sure to read the following safety cautions before conducting repair work.

The caution items are classified into “Warning” and “Caution”. The “Warning” items are especially important since they can lead to death or serious injury if they are not followed closely. The “Caution” items can also lead to serious accidents under some conditions if they are not followed. Therefore, be sure to observe all the safety caution items described below.

About the pictograms

△ This symbol indicates an item for which caution must be exercised.
The pictogram shows the item to which attention must be paid.

○ This symbol indicates a prohibited action.
The prohibited item or action is shown inside or near the symbol.

● This symbol indicates an action that must be taken, or an instruction.
The instruction is shown inside or near the symbol.

After the repair work is complete, be sure to conduct a test operation to ensure that the equipment operates Normally, and explain the cautions for operating the product to the customer.

1.2.1 Caution in Repair

Warning	
Be sure to disconnect the power cable plug from the plug socket before disassembling the equipment for a repair. Working on the equipment that is connected to a power supply can cause an electrical shook. If it is necessary to supply power to the equipment to conduct the repair or inspecting the circuits, do not touch any electrically charged sections of the equipment.	
If the refrigerant gas discharges during the repair work, do not touch the discharging refrigerant gas .The refrigerant gas can cause frostbite.	
When disconnecting the suction or discharge pipe of the compressor at the welded section, release the refrigerant gas completely at a well-ventilated place first. If there is a gas remaining inside the compressor , the refrigerant gas or refrigerating machine oil discharges when the pipe is disconnected, and it can cause injury.	
If the refrigerant gas leaks during the repair work, ventilate the area. The refrigerant gas can generate toxic gases when it contacts flames.	
The step-up capacitor supplies high-voltage electricity to the electrical components of the outdoor unit. Be sure to discharge the capacitor completely before conducting repair work . A charged capacitor can cause an electrical shock.	
Do not start or stop the air conditioner operation by plugging or unplugging the power cable plug. Plugging or unplugging the power cable plug to operate the equipment can cause an electrical shock or fire.	

Warning	
Do not repair the electrical components with wet hands . Working on the equipment with wet hands can cause an electrical shock	
Do not clean the air conditioner by splashing water. Washing the unit with water can cause an electrical shock.	
Be sure to provide the grounding when repairing the equipment in a humid or wet place, to avoid electrical shock .	
Be sure to turn off the power switch and unplug the power cable when cleaning the equipment. The internal fan rotates at a high speed, and cause injury.	
Do not tilt the unit when removing it. The water inside the unit can spill and wet the furniture and floor.	
Be sure to check that the refrigerating cycle section has cooled down sufficiently before conducting repair work. Working on the unit when the refrigerating cycle section is hot can cause burns.	
Use the welder in a well-ventilated place. Using the welder in an enclosed room can cause oxygen deficiency.	

1.2.2 Cautions Regarding Products after Repair

Warning	
Be sure to use parts listed in the service parts list of the applicable model and appropriate tools to conduct repair work. Never attempt to modify the equipment. The use of inappropriate parts or tools can cause an electrical shock, excessive heat generation or fire.	
When relocating the equipment, make sure that the new installation site has sufficient strength to withstand the weight of the equipment. If the installation site does not have sufficient strength and if the installation work is not conducted securely, the equipment can fall and cause injury.	
Be sure to install the product correctly by using the provided standard installation frame. Incorrect use of the installation frame and improper installation can cause the equipment to fall, resulting in injury.	For integral units only
Be sure to install the product securely at the place where the body can be supported sufficiently . If the unit is not securely mounted, it can fall and cause injury.	For integral units only

Warning	
Be sure to use an exclusive power circuit for the equipment, and follow the technical standards related to the electrical equipment, the internal wiring regulations and the instruction manual for installation when conducting electrical work. Insufficient power circuit capacity and improper electrical work can cause an electrical shock or fire.	
Be sure to use the specified cable to connect between the indoor and outdoor units. Make the connections securely and route the cable properly so that there is no force pulling the cable at the connection terminals. Improper connections can cause excessive heat generation or fire.	
When connecting the cable between the indoor and outdoor units, make sure that the terminal cover does not lift off or dismount because of the cable. If the cover is not mounted properly, the terminal connection section can cause an electrical shock, excessive heat generation or fire.	
Do not damage or modify the power cable. Damaged or modified power cable can cause an electrical shock or fire. Placing heavy items on the power cable, and heating or pulling the power cable can damage the cable.	
Do not mix air or gas other than the specified refrigerant (R-410A / R22) in the refrigerant system. If air enters the refrigerating system, an excessively high pressure results, causing equipment damage and injury.	
If the refrigerant gas leaks, be sure to locate the leak and repair it before charging the refrigerant. After charging refrigerant, make sure that there is no refrigerant leak. If the leak cannot be located and the repair work must be stopped, be sure to perform pump-down and close the service valve, to prevent the refrigerant gas from leaking into the room. The refrigerant gas itself is harmless, but it can generate toxic gases when it contacts flames, such as fan and other heaters, stoves and ranges.	. 
When replacing the coin battery in the remote controller, be sure to disposed of the old battery to prevent children from swallowing it. If a child swallows the coin battery, see a doctor immediately.	

Caution	
Installation of a leakage breaker is necessary in some cases depending on the conditions of the installation site, to prevent electrical shocks.	
Do not install the equipment in a place where there is a possibility of combustible gas leaks. If a combustible gas leaks and remains around the unit, it can cause a fire.	
Be sure to install the packing and seal on the installation frame properly. If the packing and seal are not installed properly, water can enter the room and wet the furniture and floor.	

1.2.3 Inspection after Repair

Warning	
Check to make sure that the power cable plug is not dirty or loose, then insert the plug into a power outlet all the way. If the plug has dust or loose connection, it can cause an electrical shock or fire.	
If the power cable and lead wires have scratches or deteriorated, be sure to replace them. Damaged cable and wires can cause an electrical shock, excessive heat generation or fire.	

Warning	
Do not use a joined power cable or extension cable, or share the same power outlet with other electrical appliances since it can cause an electrical shock, excessive heat generation or fire.	

Caution	
Check to see if the parts and wires are mounted and connected properly, and if the connections at the soldered or crimped terminals are secure. Improper installation and connections can cause excessive heat generation, fire or an electrical shock.	
If the installation platform or frame has corroded, replace it. Corroded installation platform or frame can cause the unit to fall, resulting in injury.	
Check the grounding, and repair it if the equipment is not properly grounded. Improper grounding can cause an electrical shock.	
Be sure to measure the insulation resistance after the repair, and make sure that the resistance is 1 M ohm or higher. Faulty insulation can cause an electrical shock.	
Be sure to check the drainage of the indoor unit after the repair. Faulty drainage can cause the water to enter the room and wet the furniture and floor.	

1.2.4 Using Icons

Icons are used to attract the attention of the reader to specific information. The meaning of each icon is described in the table below:

1.2.5 Using Icons List

Icon	Type of Information	Description
 Note	Note	A “note” provides information that is not indispensable, but may nevertheless be valuable to the reader, such as tips and tricks.
 Caution	Caution	A “caution” is used when there is danger that the reader, through incorrect manipulation, may damage equipment, loose data, get an unexpected result or has to restart (part of) a procedure.
 Warning	Warning	A “warning” is used when there is danger of personal injury.
	Reference	A “reference” guides the reader to other places in this binder or in this manual, where he/she will find additional information on a specific topic.

2.Features

Super quiet: Lower noise operation condition

Confortable sleep：The setting temperature and the indoor noise can be adjusted to a more comfortable level when you set the “sleep mode” during night sleep.

4 Fan setting :Select the fan speed LOW,MED,HI,AUTO

3D air flow: The 3D airflow is able to deliver the airflow horizontally and vertically.

Child lock: Avoid the child's wrong operation on the remote controller

DIY auto mode: Adjust the last fixed operation mode automatically.

Auto restart: Automatic return to previous operation conditions after sudden power blackout

24 hours timer: Use the timer function to set on,or off,or from on to off,or from off to on.

Double 8 display:The display is Double 8 mode.

Power mode: Quick cooling or heating

Smart Operation: The air conditioner can judge the indoor temperature and humidity and make the adjustment accordingly

3 Specifications

NOMINAL DISTRIBUTION SYSTEM VOLTAGE		
Phase	/	1
Frequency	Hz	50
Voltage	V	230

NOMINAL CAPACITY and NOMINAL INPUT			
		cooling	heating
Capacity rated	KW	7.2	9.0
	Btu/h	24572	30715
Power Consumption(Rated)	KW	2.06	2.73
SEER/SCOP	W/W	7.0	4.01
Annual energy consumption	KWh	360	1921
Moisture Removal	m^3/h	$4.25*10^{-3}$	

TECHNICAL SPECIFICATIONS				
Dimensions	H*W*D	mm	1810×377×407	
Packaged Dimensions	H*W*D	mm	1935×525×555	
Weight	/	KG	34	
Gross weight	/	KG	45	
Color	/	/	White	
Sound level	Sound peessure(high)	dB	47	47
	Sound power(high)	dB(A)	60	60

TECHNICAL SPECIFICATIONS-PARTS				
			cooling	heating
Fan	Type		Cross flow fan	
	Motor output	W	25	25
	Air flow rate(high)	m³/h	1200	1200
	Speed(high)	rpm	845	810
Heat exchanger	Type		ML fin- Φ7HI-HX tube	
	Row*stage*fitch		2*50*1.4	
Air direction control			Right,Left,Horizontal,Downward	
Air filter			Removable/Washable/Mildew Proof	
Temperature control			Microcomputer Control	
Remote controller model			YR-HB15	

Note: the data are based on the conditions shown in the table below

cooling	heating	Piping length
Indoor: 32℃DB/23℃WB Outdoor: 43℃DB/26℃WB	Indoor:20℃DB/-℃WB Outdoor: 2℃DB/1℃WB	5m

Conversation formulae
Kcal/h= KW×860 Btu/h= KW×3414 cfm=m³/min×35.3

4. Sensors list

type	Description	Qty
Room sensor	Its used for detecting room temperature	1
Pipe sensor	Its used for detecting temperature of evaporator	1

5. Pinping diagrams

Cooling mode

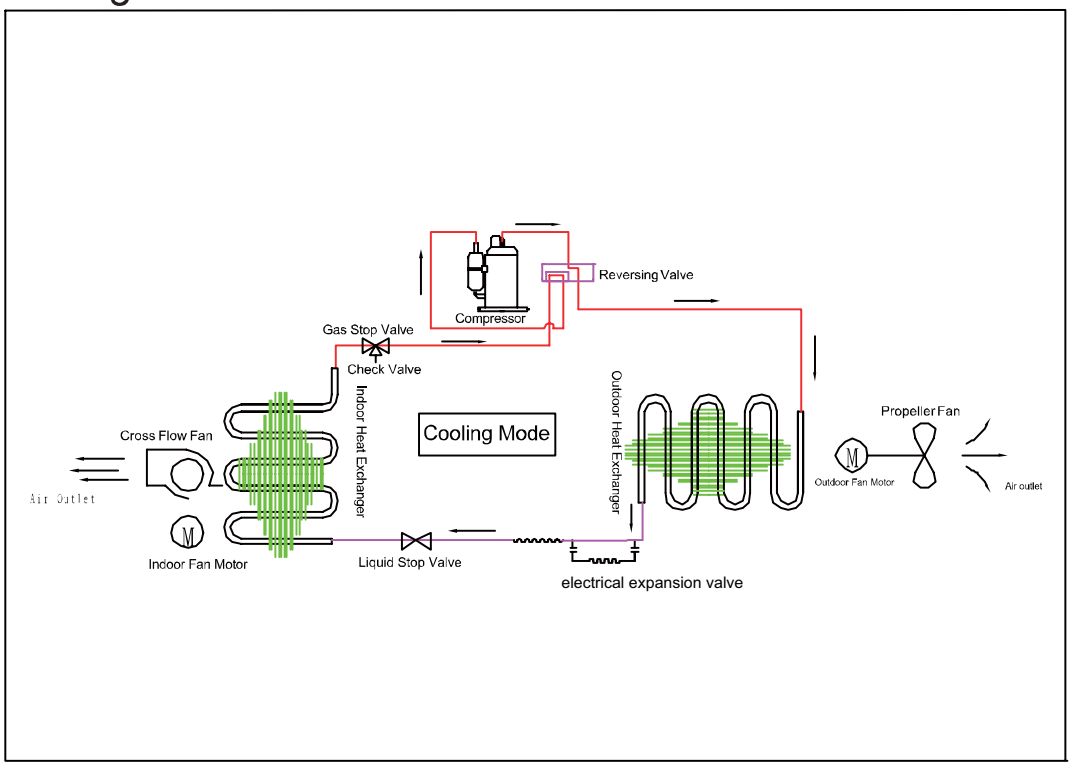

Heating mode

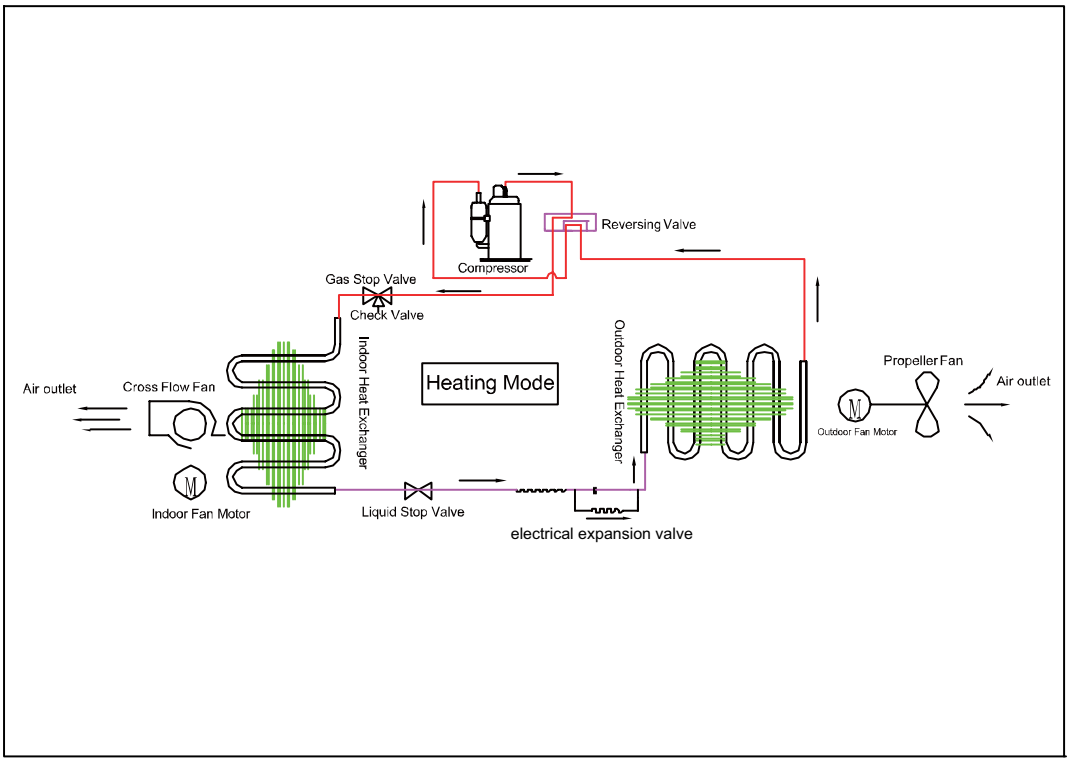

6. Printed Circuit Board Connector Wiring Diagram

Connectors

PCB(1) (Control PCB)

series	PCB connector	Connect with load
1	CN17	Connector for power N
2	CN21	Connector for power L
3	CN35	Connector for communication with outdoor
4	CN2' CN4 CN5 CN8 CN13	Connector for step motor
5	CN9	Connector for heat exchanger thermistor and Room temperature thermistor
6	CN6	Connector for anion generator
7	CN11	Connector for display board
8	CN23	Connector for photoelectric switch
9	CN3	Connector for fan motor

PCB(1)

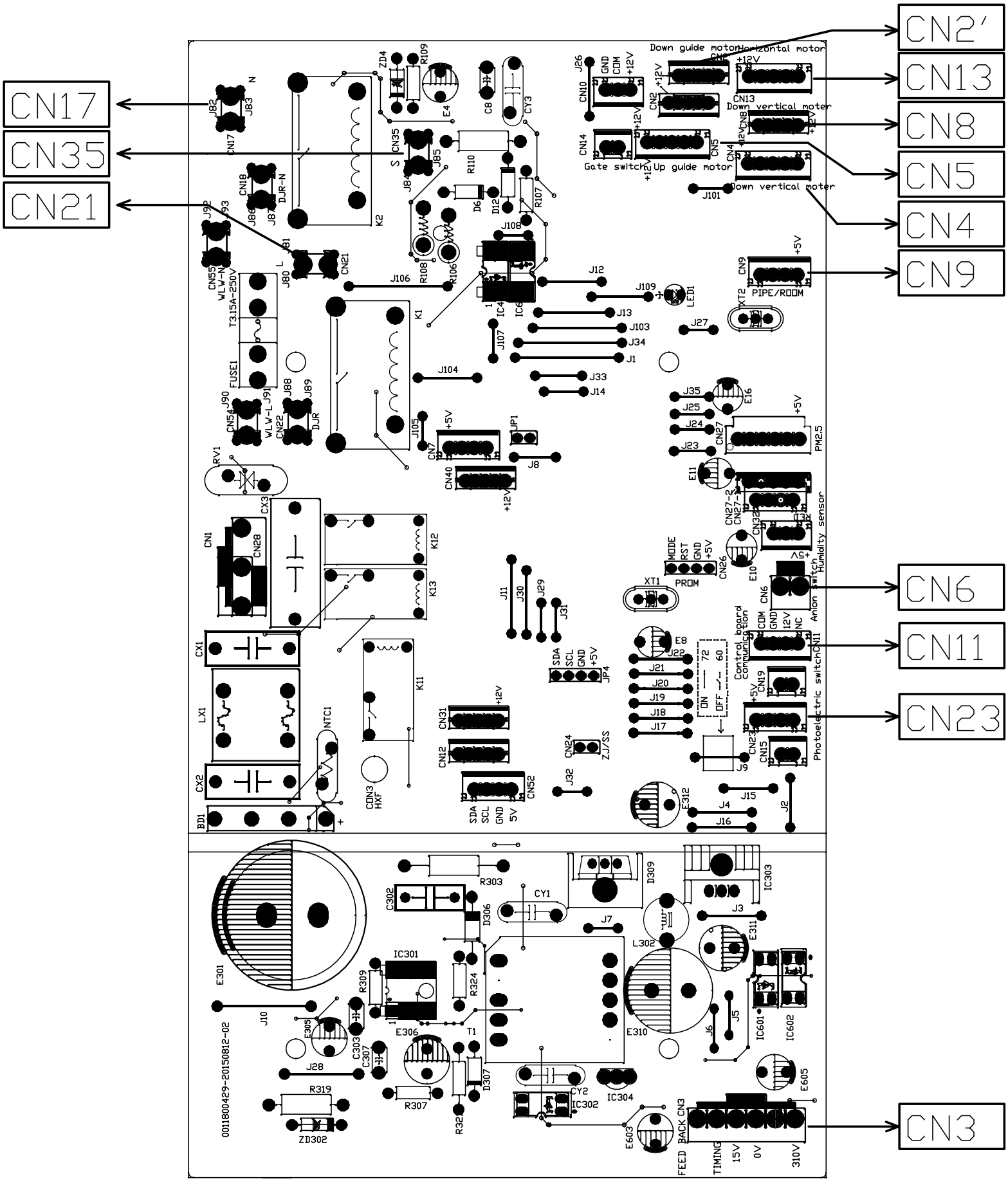
CN17
CN35
CN21
CN2′
CN13
CN8
CN5
CN4
CN9
CN6
CN11
CN23
CN3
Down guide motor
Horizontal motor
Down vertical motor
Gate switch
Up guide motor
PIPE/ROOM
PM2.5
Humidity sensor
Anion switch
Control board communication
Photoelectric switch
PROM
BACK CN3
FEED
TIMING
15V
0V
310V
001800429-20150812-02

Wiring diagrams

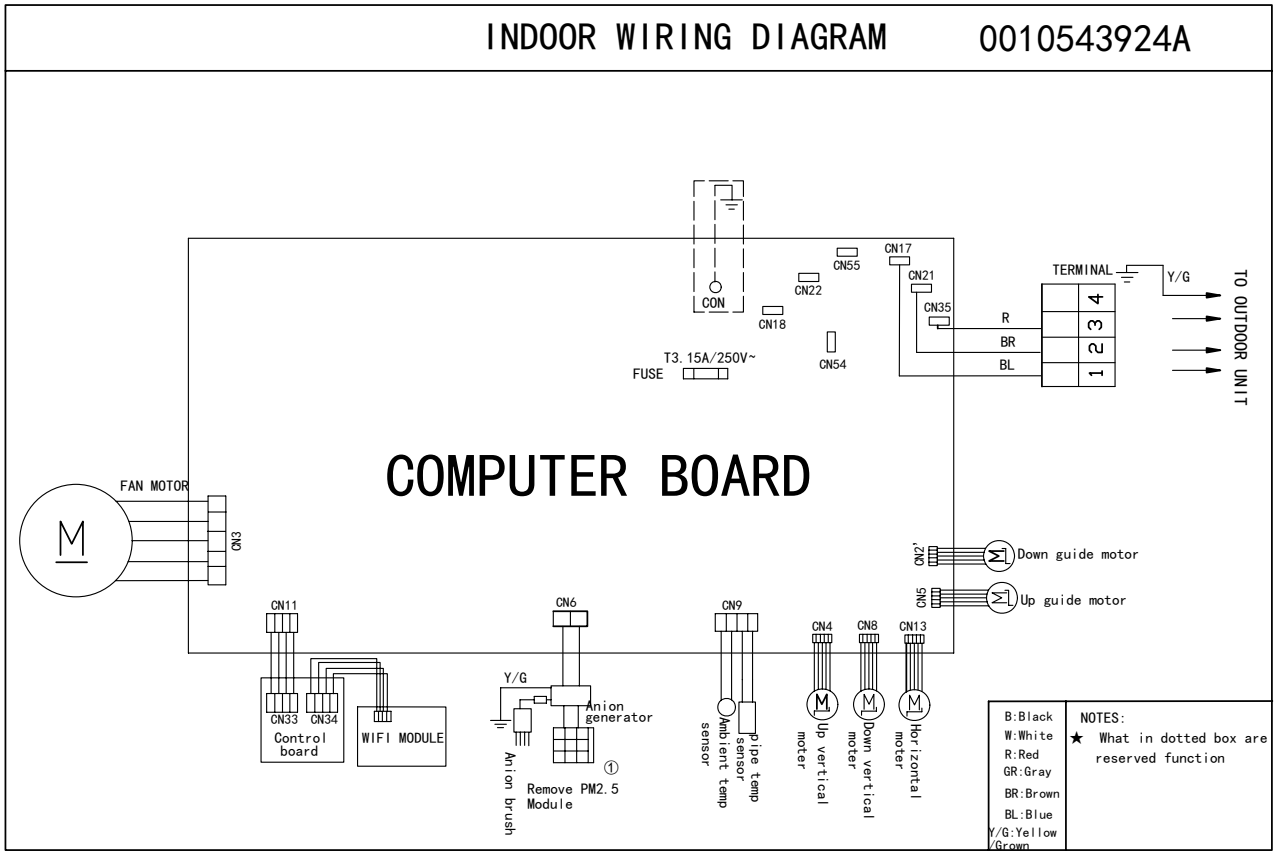

7.Funcitions and Control

7.1 Main functions and control specification

7.1.1 Automatic operation

When the running mode is turned to automation after starting the system, the system will first determine the running mode according to the current room temperature and then will run according to the determined mode. Tr in the following selection conditions means room temperature, Ts means setting temperature, Tp means temperature of indoor coil pipe

Tr＞Ts-3℃ Choose Cooling Mode

Tr≤Ts-3℃ Choose Heating Mode

After turning to the automation mode, the running mode can be switched between cooling mode, fan mode and heating mode according to the change of the indoor ambient temperature. But the automatic conversion between cooling mode and heating mode must be conducted after 15 minutes.

7.1.2 Cooling operation mode

Temperature control range: 16℃---30℃

Temperature difference: ±1℃

* Control features: When Tr（input airflow）>Ts（set temperature）℃, the compressor will be opened, the indoor fan will operate at the set speed. When Tr （input airflow）<Ts（set temperature）℃, the compressor will be be closed and the outdoor fan will not operate. After the compressor stops to operate, if the Tr＞Ts, the compressor will will be opened and the outdoor fan begin to operate.

Airflow speed control: (temperature difference 1℃)

Automatic: The air conditioner unit select the fan speed (High, Medium, Low) automatically according to the change of the indoor ambient temperature.

Manus: When the system is operating, you can set the high, medium or low speed manually.

Compressor control: When the temperature of the indoor coil is too low, the compressor will be stopped. When the temperature of the indoor coil is raised, the compressor will be restarted again.

* timing system on/off function.
* sleep function.
* health function.
* fresh function.

The above 4 functions are available under cooling operation mode.

7.1.3 Demoisture mode.

* temperature control range: 16-30 ℃
* temperature difference: ±1℃

Control feature: send the demoisture signal to the outdoor system.

When Tr>Ts+2℃, the compressor will be turned on, the indoor fan will operate at the set speed.

When Tr is between the Ts and Ts+2℃, the outdoor system will operate at the high demoisture frequency for 10 minutes and then at the low demoisture mode for six minutes. The indoor fan will operate at low speed.

When Tr< Ts, the outsystem will be stopped, the indoor fan will be stopped for 3 minutes and then turned to the low speed option.

When Hs＞Hr, the outdoor system stops to operate, the indoor fan will stop after operating 30s.

All the frequency converses have a ±1℃ difference.

* Wind speed control: Automatic:

When Tr >= Ts+ 5℃, high speed.

When Ts+3℃≤Tr< Ts+5℃, medium speed.

When Tr< Ts+3℃， low speed.

When Tr≤15℃， indoor fan stopped .

Compressor control: When the temperature of the indoor coil is too low, the compressor will be stopped. When the temperature of the indoor coil is raised, the compressor will be restarted again.

* timing system on/off function.
* sleep function.
* health function.
* fresh function.

The above 4 functions are available under cooling operation mode.

7.1.4 Heating operation mode.

* temperature control range: 16---30℃
* temperature difference: ±1℃
* control feature: the temperature compensation is automatically added and the system will send the heating signals to the outdoor system.

If Tr<Ts, the outdoor compressor is turned on, the indoor fan will be at the cold air proof mode.

If Tr>Ts, the outdoor system is turned off, the indoor fan will operate 30s at low speed and then stop running. After the compressor stops running for 3 minutes, If Tr<Ts, the outdoor compressor will be turned on again, and the indoor fan will be at the cold air proof mode.

*Indoor fan control

Airflow speed control: (temperature difference 1℃)

manual control: You can choose high, medium, low and automatic speed control.

Automatic: When Tr≤Ts-5℃, high speed.

When Ts-5℃<Tr≤Ts-3℃, medium speed.

When Tr> Ts-3 ℃, low speed.

*Coldair proof operation

About 4 minutes after the start up of the compressor, If the indoor heat interaction temperature is too low, the indoor fan will stopped running or run at low speed.After the temperature of the indoor coil is raised, the indoor fan will operate as per the setted airflow speed.
After turning off the temperature sensor or during the heating operation (except defrosting) , the indoor fan will run at low speed for 30s and then stop running.

* Heating overload protection
During the running of the compressor(the running time is more than 60s), if the temperature of the indoor coil is too high or the system is overload, the outdoor system will stop operating.

*Defrosting
If the outdoor unit appears too much frosting and influence the outlet air temperature during the heating process, the air conditioner unit will exit from the heating operation mode and defrosting for few minutes. After defrosting is finished, the unit will exit from the defrosting mode and enter into heating mode again.

* timing system on/off function.
* sleep function.
* health function.
* fresh function.

The above 4 functions are available under cooling operation mode.

7.1.5 Power/Quiet operation

The system enters the “Power”mode after receiving the ‘power signal’.

Send strength operation signal to the outdoor system.

After enter into this operation mode, fan speed automatically takes high speed of auto fan speed.

The system enters the “Quiet”mode after receiving the quiet signal’.
After enter into this operation mode, fan speed automatically takes low speed of auto fan speed.

7.1.6 Timing

You can set 24 hours' on/off timing accordingly. After the setting, the timing indicator will be lightened. Also, the light will be turning off after the timing is finished. The followings are several timing methods.

1.system /on timing: The timing indicator will be lightened and the indoor system is under the waiting mode. The light will be turned off when the timing is finished and the rest of the system will operate under a normal condition. The timing starts since the last reception of the timing signal.

2.system /off timing: When the system is turned on, the timing indicator is lightened, the rest of the system will operated under a normal condition. When set time comes, the indicator light will be turned off and the system will be turned off.

3 .system /on and off timing: The settings will be completed according to the orders..

7.1.7 Comfortable sleep operation

Before going to bed, you can simply press the SLEEP button and unit will operate in SLEEP mode and bring you a sound sleep.

Operation mode

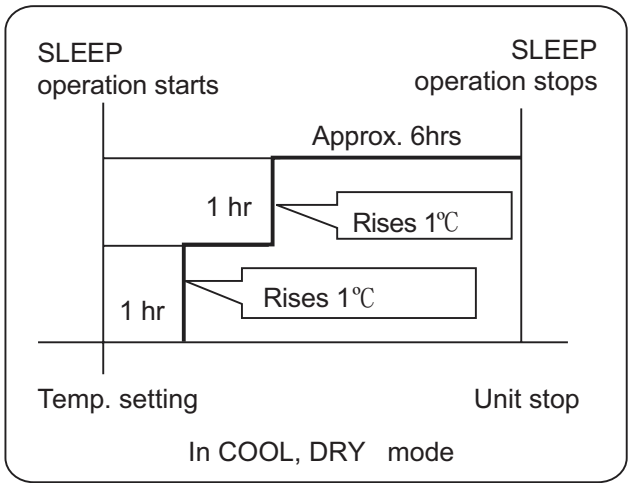

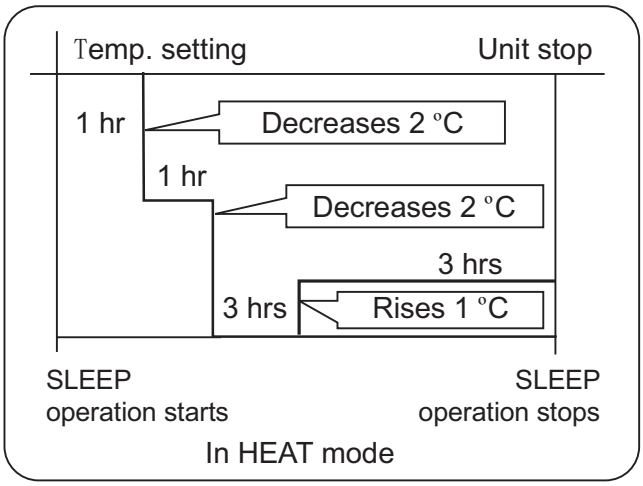

1. In COOL, DRY mode

1 hours after SLEEP mode starts, temp. will become 1 ºC higher than temp. setting. After another 1 hours, temp. rises by 1 ºC further. The unit will run for further 6 hours then stops Temp. is higher than temp. setting so that room temperature won't be too low for your sleep.

2. In HEAT mode

1 hours after SLEEP mode starts, temp will become 2 ºC lower than temp. setting. After another 1 hours, temp decrease by 2 ºC further. After more another 3 hours, temp. rises by 1 ºC further. The unit will run for further
3 hours then stops. Temp. is lower than temp. setting so that room temperature won't be too high for your sleep.

3. In SMART mode

The unit operates in corresponding sleep mode, which adapted to the automatically selected operation mode.

4. When quiet sleeping function is set to 8 hours the quiet sleeping time can not be adjusted. When TIMER function is set, the quiet sleeping function can't be set up.After the sleeping function is set up, if user resets timer function the sleeping function will be cancelled; the machine will be in the state of timing-on, if the two modes are set up at the same time, either of their operation time is ended first, the unit will stop automatically, and the other mode will be cancelled.

7.1.8 Power Saving Operation

Automatic adjusting with the environmental temjperature, running with powe saving.
1, Available operation mode: Heating, Cooling, Dehumidifying.
2, Control features: After the power saving is set, the host machine will judge the temperature difference between setted temperature and indoor room temperature and unit running time. The unit will adjust the set temperature according to the judgement.
After the power saving is set, the host machine will automatically adjust the setting temperature, and automatically control the switch of the compressor,which may be inconsistent with the user's setting.The power saving function is more effective after the air conditioning has been running for a long time (more than 2 hours)
After cancelling the power saving function, the unit will restore the original setting temperature and fan speed.

7.1.9 Power cut compensation

* Entering condition: Press dormant button 10 times within 5 seconds, the buzzer will ring 4 times and the present system status will be stored into the EEPROM of the indoor system.

* After entering the power cut compensation mode, the processing of the indoor system should be as the followings:

Remote control urgency signal: operate according to the remote control and the urgent conditions, the present status will be stored into the EEPROM of the indoor system.

* Quitting conditions: Press dormant button 10 times within 5 seconds and the buzzer will ring twice.

7.1.10 Test run:

After the host machine received the signal from the control board, test run operation begins,and compressor starts (but subject to the limit of 3-minute delay excluding the first time),During the test run, the operation mode of the unit if cooling operation and the indoor fan will run with high speed.
.

7.2 Value of thermistor

Room sensor and Pipe Sensor

R25℃=10KΩ±3%

B25℃/50℃=3700K±3%

Temp.((℃))	Max.(KΩ)	Normal(KΩ)	Min.(KΩ)	Tolerance(℃)	
-30	165.2170	147.9497	132.3678	-1.94	1.75
-29	155.5754	139.5600	125.0806	-1.93	1.74
-28	146.5609	131.7022	118.2434	-1.91	1.73
-27	138.1285	124.3392	111.8256	-1.89	1.71
-26	130.2371	117.4366	105.7989	-1.87	1.70
-25	122.8484	110.9627	100.1367	-1.85	1.69
-24	115.9272	104.8882	94.8149	-1.83	1.67
-23	109.4410	99.1858	89.8106	-1.81	1.66
-22	103.3598	93.8305	85.1031	-1.80	1.64
-21	97.6556	88.7989	80.6728	-1.78	1.63
-20	92.3028	84.0695	76.5017	-1.76	1.62
-19	87.2775	79.6222	72.5729	-1.74	1.60
-18	82.5577	75.4384	68.8710	-1.72	1.59
-17	78.1230	71.5010	65.3815	-1.70	1.57
-16	73.9543	67.7939	62.0907	-1.68	1.55
-15	70.0342	64.3023	58.9863	-1.66	1.54
-14	66.3463	61.0123	56.0565	-1.64	1.52
-13	62.8755	57.9110	53.2905	-1.62	1.51
-12	59.6076	54.9866	50.6781	-1.60	1.49
-11	56.5296	52.2278	48.2099	-1.58	1.47
-10	53.6294	49.6244	45.8771	-1.56	1.46
-9	50.8956	47.1666	43.6714	-1.54	1.44
-8	48.3178	44.8454	41.5851	-1.51	1.42
-7	45.8860	42.6525	39.6112	-1.49	1.40
-6	43.5912	40.5800	37.7429	-1.47	1.39
-5	41.4249	38.6207	35.9739	-1.45	1.37
-4	39.3792	36.7676	34.2983	-1.43	1.35
-3	37.4465	35.0144	32.7108	-1.41	1.33
-2	35.6202	33.3552	31.2062	-1.38	1.31
-1	33.8936	31.7844	29.7796	-1.36	1.29
0	32.2608	30.2968	28.4267	-1.34	1.28
1	30.7162	28.8875	27.1431	-1.32	1.26
2	29.2545	27.5519	25.9250	-1.29	1.24
3	27.8708	26.2858	24.7686	-1.27	1.22
4	26.5605	25.0851	23.6704	-1.25	1.20
5	25.3193	23.9462	22.6273	-1.23	1.18
6	24.1432	22.8656	21.6361	-1.20	1.16

7	23.0284	21.8398	20.6939	-1.18	1.14
8	21.9714	20.8659	19.7982	-1.15	1.12
9	20.9688	19.9409	18.9463	-1.13	1.09
10	20.0176	19.0621	18.1358	-1.11	1.07
11	19.1149	18.2270	17.3646	-1.08	1.05
12	18.2580	17.4331	16.6305	-1.06	1.03
13	17.4442	16.6782	15.9315	-1.03	1.01
14	16.6711	15.9601	15.2657	-1.01	0.99
15	15.9366	15.2770	14.6315	-0.98	0.96
16	15.2385	14.6268	14.0271	-0.96	0.94
17	14.5748	14.0079	13.4510	-0.93	0.92
18	13.9436	13.4185	12.9017	-0.91	0.90
19	13.3431	12.8572	12.3778	-0.88	0.87
20	12.7718	12.3223	11.8780	-0.86	0.85
21	12.2280	11.8126	11.4011	-0.83	0.83
22	11.7102	11.3267	10.9459	-0.81	0.80
23	11.2172	10.8634	10.5114	-0.78	0.78
24	10.7475	10.4216	10.0964	-0.75	0.75
25	10.3000	10.0000	9.7000	-0.75	0.75
26	9.8975	9.5974	9.2980	-0.76	0.76
27	9.5129	9.2132	8.9148	-0.80	0.80
28	9.1454	8.8465	8.5496	-0.84	0.83
29	8.7942	8.4964	8.2013	-0.87	0.86
30	8.4583	8.1621	7.8691	-0.91	0.90
31	8.1371	7.8428	7.5522	-0.95	0.93
32	7.8299	7.5377	7.2498	-0.98	0.97
33	7.5359	7.2461	6.9611	-1.02	1.00
34	7.2546	6.9673	6.6854	-1.06	1.04
35	6.9852	6.7008	6.4222	-1.10	1.07
36	6.7273	6.4459	6.1707	-1.13	1.11
37	6.4803	6.2021	5.9304	-1.17	1.14
38	6.2437	5.9687	5.7007	-1.21	1.18
39	6.0170	5.7454	5.4812	-1.25	1.22
40	5.7997	5.5316	5.2712	-1.29	1.25
41	5.5914	5.3269	5.0704	-1.33	1.29
42	5.3916	5.1308	4.8783	-1.37	1.33
43	5.2001	4.9430	4.6944	-1.41	1.36
44	5.0163	4.7630	4.5185	-1.45	1.40
45	4.8400	4.5905	4.3500	-1.49	1.44
46	4.6708	4.4252	4.1887	-1.53	1.47
47	4.5083	4.2666	4.0342	-1.57	1.51
48	4.3524	4.1145	3.8862	-1.61	1.55
49	4.2026	3.9686	3.7443	-1.65	1.59
50	4.0588	3.8287	3.6084	-1.70	1.62

51	3.9206	3.6943	3.4780	-1.74	1.66
52	3.7878	3.5654	3.3531	-1.78	1.70
53	3.6601	3.4416	3.2332	-1.82	1.74
54	3.5374	3.3227	3.1183	-1.87	1.78
55	3.4195	3.2085	3.0079	-1.91	1.82
56	3.3060	3.0989	2.9021	-1.95	1.85
57	3.1969	2.9935	2.8005	-2.00	1.89
58	3.0919	2.8922	2.7029	-2.04	1.93
59	2.9909	2.7948	2.6092	-2.08	1.97
60	2.8936	2.7012	2.5193	-2.13	2.01
61	2.8000	2.6112	2.4328	-2.17	2.05
62	2.7099	2.5246	2.3498	-2.22	2.09
63	2.6232	2.4413	2.2700	-2.26	2.13
64	2.5396	2.3611	2.1932	-2.31	2.17
65	2.4591	2.2840	2.1195	-2.36	2.21
66	2.3815	2.2098	2.0486	-2.40	2.25
67	2.3068	2.1383	1.9803	-2.45	2.29
68	2.2347	2.0695	1.9147	-2.49	2.34
69	2.1652	2.0032	1.8516	-2.54	2.38
70	2.0983	1.9393	1.7908	-2.59	2.42
71	2.0337	1.8778	1.7324	-2.63	2.46
72	1.9714	1.8186	1.6761	-2.68	2.50
73	1.9113	1.7614	1.6219	-2.73	2.54
74	1.8533	1.7064	1.5697	-2.78	2.58
75	1.7974	1.6533	1.5194	-2.83	2.63
76	1.7434	1.6021	1.4710	-2.88	2.67
77	1.6913	1.5528	1.4243	-2.92	2.71
78	1.6409	1.5051	1.3794	-2.97	2.75
79	1.5923	1.4592	1.3360	-3.02	2.80
80	1.5454	1.4149	1.2942	-3.07	2.84
81	1.5000	1.3721	1.2540	-3.12	2.88
82	1.4562	1.3308	1.2151	-3.17	2.93
83	1.4139	1.2910	1.1776	-3.22	2.97
84	1.3730	1.2525	1.1415	-3.27	3.01
85	1.3335	1.2153	1.1066	-3.32	3.06
86	1.2953	1.1794	1.0730	-3.38	3.10
87	1.2583	1.1448	1.0405	-3.43	3.15
88	1.2226	1.1113	1.0092	-3.48	3.19
89	1.1880	1.0789	0.9789	-3.53	3.24
90	1.1546	1.0476	0.9497	-3.58	3.28
91	1.1223	1.0174	0.9215	-3.64	3.33
92	1.0910	0.9882	0.8942	-3.69	3.37
93	1.0607	0.9599	0.8679	-3.74	3.42
94	1.0314	0.9326	0.8424	-3.80	3.46

95	1.0030	0.9061	0.8179	-3.85	3.51
96	0.9756	0.8806	0.7941	-3.90	3.55
97	0.9490	0.8558	0.7711	-3.96	3.60
98	0.9232	0.8319	0.7489	-4.01	3.64
99	0.8983	0.8088	0.7275	-4.07	3.69
100	0.8741	0.7863	0.7067	-4.12	3.74
101	0.8507	0.7646	0.6867	-4.18	3.78
102	0.8281	0.7436	0.6672	-4.23	3.83
103	0.8061	0.7233	0.6484	-4.29	3.88
104	0.7848	0.7036	0.6303	-4.34	3.92
105	0.7641	0.6845	0.6127	-4.40	3.97
106	0.7441	0.6661	0.5957	-4.46	4.02
107	0.7247	0.6482	0.5792	-4.51	4.07
108	0.7059	0.6308	0.5632	-4.57	4.12
109	0.6877	0.6140	0.5478	-4.63	4.16
110	0.6700	0.5977	0.5328	-4.69	4.21
111	0.6528	0.5820	0.5183	-4.74	4.26
112	0.6361	0.5667	0.5043	-4.80	4.31
113	0.6200	0.5518	0.4907	-4.86	4.36
114	0.6043	0.5374	0.4775	-4.92	4.41
115	0.5891	0.5235	0.4648	-4.98	4.45
116	0.5743	0.5100	0.4524	-5.04	4.50
117	0.5600	0.4968	0.4404	-5.10	4.55
118	0.5460	0.4841	0.4288	-5.16	4.60
119	0.5325	0.4717	0.4175	-5.22	4.65
120	0.5194	0.4597	0.4066	-5.28	4.70

8 System configuration

8.1System configuration

After the installation and test operation of the room air conditioner have been completed, it should be operated and handled as described below. Every user would like to know the correct method of operation of the room air conditioner, to check if it is capable of cooling(or heating) well, and to know a clever method of using it. In order to meet this expectation of the users, giving sufficient explanations taking enough time can be said to reduce about 80% of the requests for servicing. However good the installation work is and however good the functions are, the customer may blame either the room air conditioner or its installation work because of improper handling. The installation work and handing over of the unit can only be considered to have been completed when its handling has been explained to the user without using technical terms but giving full knowledge of the equipment.

8.2 Instruction

Please refer to the <Packaged type room air conditioner operation manual and installation manual>

9.Dimensional drawings--Deepth & Wide & Height

unit:mm

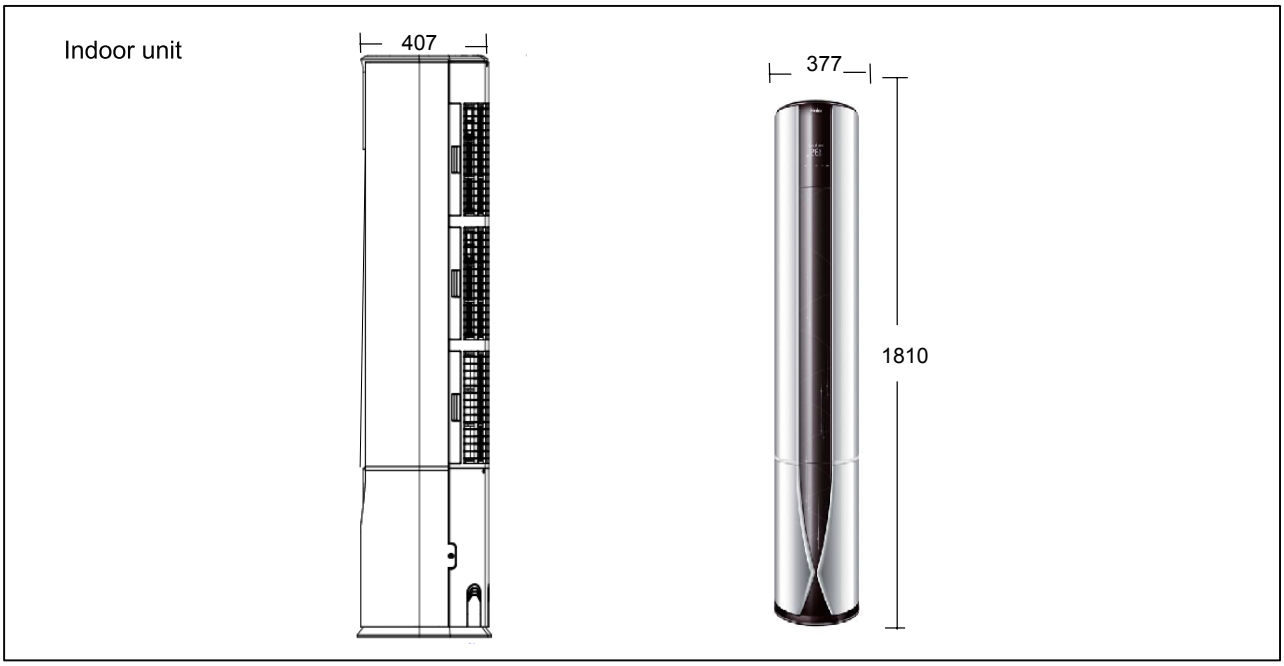

10.Dimensional drawings-- other parts

unit:mm

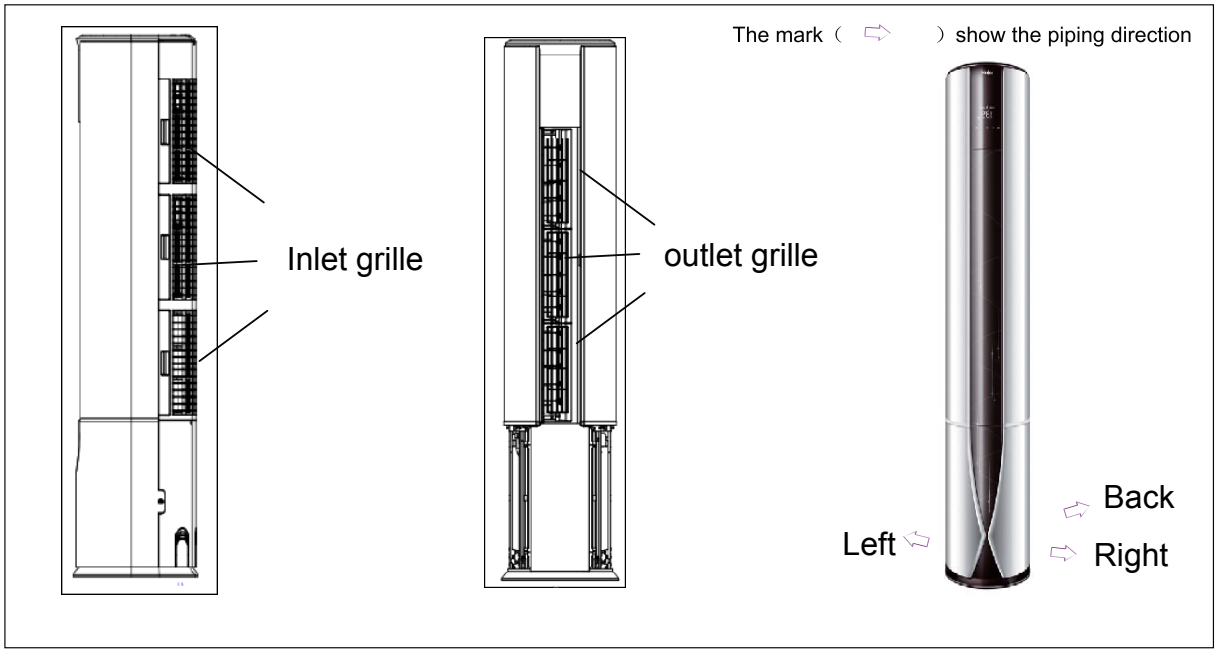

11 Service Diagnosis

11.1 Caution for Diagnosis

The operation lamp flashes when any of the following errors is detected.

1. When a protection device of the indoor or outdoor unit is activated or when the thermistor malfunctions, disabling equipment operation.

2. When a signal transmission error occurs between the indoor and outdoor units. In either case, conduct the diagnostic procedure described in the following pages.

11.2 Parameter of primary electronic appliance

NO	Name	Parameter	Picture
1	Fan motor	Rated voltage: DC310V Rated current:0.105A Rated frequency: – Rated output :25 W	

11.3 Problem Symptoms and Measures

Symptom	Check Item	Details of Measure
None of the units operates	Check the power supply.	Check to make sure that the rated voltage is supplied.
	Check the indoor PCB.	Check to make sure that the indoor PCB is broken.
Operation sometimes stops	Check the power supply.	A power failure of 2 to 10 cycles can stop air conditioner operation.
Equipment operates but does not cool, or does not heat (only for heat pump)	Check for faulty operation of the electronic expansion valve.	Set the units to cooling operation, and compare the temperatures of the liquid side connection pipes of the connection section among rooms to check the opening and closing operation of the electronic expansion valves of the individual units.
	Diagnosis by service port pressure and operating current.	Check for insufficient gas.
Large operating noise and vibrations	Check the installation condition.	Check to make sure that the required spaces for installation (specified in the Technical Guide, etc.) are provided.

11.4 Error Codes and Description indoor display

	Code indication		fault description	Reference Page
	Indoor displaying panel code indication	Outdoor (LED1 flash times)		
Indoor and Outdoor	E7	15	Communication fault between indoor and outdoor units	Page . 37
Indoor Malfunction	E1	--	Room temperature sensor failure	Page . 27
	E2	--	Heat-exchange sensor failure	Page . 27
	E4	--	Indoor EEPROM error	Page . 28
	E14	--	Indoor fan motor malfunction	Page . 29
Outdoor Malfunction	F12	1	Outdoor EEPROM error	Page . 28
	F1	2	The protection of IPM	Page .32
	F22	3	Overcurrent protection of AC electricity for the outdoor model	Page . 26
	F3	4	Communication fault between the IPM and outdoor PCB	Page. 34
	F19	6	Power voltage is too high or low	Page .35
	F4	8	Overheat protection for Discharge temperature	Page .36
	F8	9	Outdoor DC fan motor fault	Page . 31
	F21	10	Defrost temperature sensor failure	Page . 26
	F7	11	Suction temperature sensor failure	Page . 26
	F6	12	Ambient temperature sensor failure	Page . 26
	F25	13	Discharge temperature sensor failure	Page . 26
	F11	18	deviate from the normal for the compressor	Page . 26
	F28	19	Loop of the station detect error	Page . 26
	F2	24	Overcurrent of the compressor	Page .33
	F23	25	Overcurrent protection for single-phase of the compressor	Page . 26
	E9	21	High work-intense protection	Page .40

11.4.1 Thermistor or Related Abnormality

Indoor Display	E1: Room temperature sensor failure E2: Heat-exchange sensor failure
outdoor display	LED1 flash 10 times ： Frost-removing temperature sensor failure LED1 flash 11 times：Suction temperature sensor failure LED1 flash 12 times：Ambient temperature sensor failure LED1 flash 13 times：Exhaust temperature sensor failure
Method of Malfunction Detection	The temperatures detected by the thermistors are used to determine thermistor errors
Malfunction Decision Conditions	when the thermistor input is more than 4.92V or less than 0.08V during compressor operation. ● Note: The values vary slightly in some models
Supposed Causes	■ Faulty connector connection ■ Faulty thermistor ■ Faulty PCB
Troubleshooting	* Caution Be sure to turn off power switch before connect or disconnect connector, or else parts damage may be occurred.

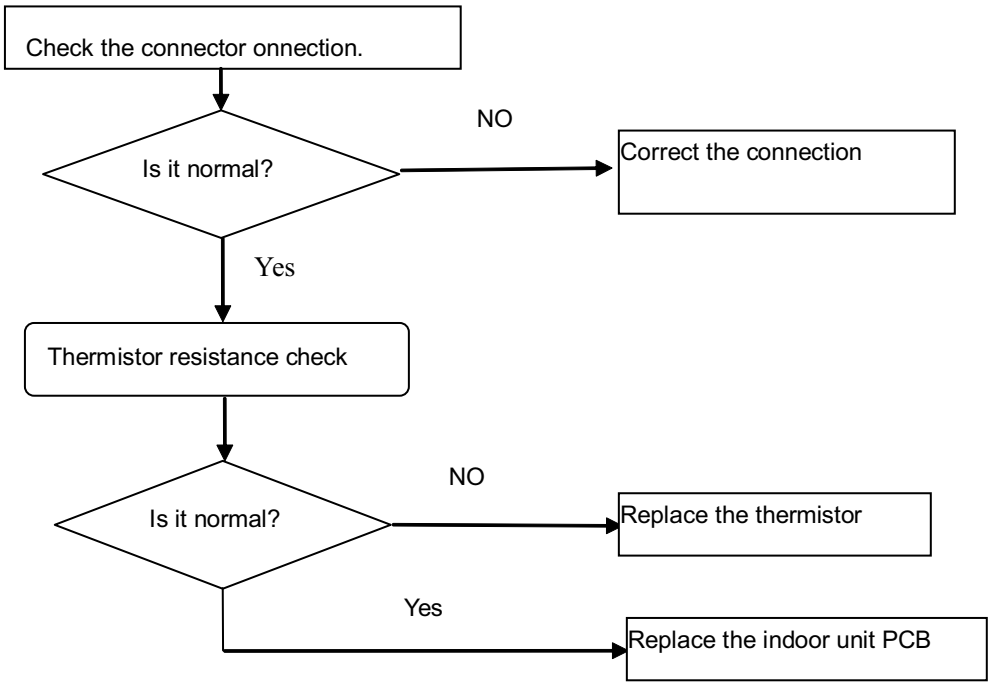

Thermistor resistance check method:

Remove the connector of the thermistor on the PCB, and measure the resistance of thermistor using tester.The relationship between normal temperature and resistance is shown in the value of indoor thermistor.

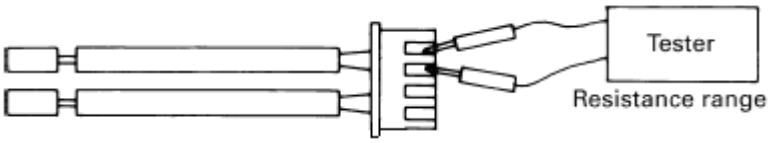

11.4.2 EEPROM abnormal

Indoor Display	E4: indoor EEPROM error
outdoor display	F12: Outdoor EEPROM error; Outdoor LED1 flash 1 times
Method of malfunction detection	The Data detected by the EEPROM are used to determine MCU
Malfunction detection conditions	when the data of EEPROM is error or the EEPROM is damaged
Supposed causes	■Faulty EEPROM data ■Faulty EEPROM ■Faulty PCB
Troubleshooting	* Caution Be sure to turn off power switch before connect or disconnect connector, or parts damage may be occurred.

Replace the indoor or outdoor mainboard

11.4.3 Indoor fan motor malfunction

Indoor Display	E14
Method of Malfunction Detection	The rotation speed detected by the Hall IC during fan motor operation is used to determine abnormal fan motor operation
Malfunction Decision Conditions	when the detected rotation feedback singal don't receiced in 2 minutes
Supposed Causes	■ Operation halt due to breaking of wire inside the fan motor . ■ Fan motor overheat protection ■ Operation halt due to breaking of the fan motor lead wires ■ Detection error due to faulty indoor unit PCB
Troubleshooting	* Caution Be sure to turn off power switch before connect or disconnect connector, or else parts damage may be occurred.

How to check Fan Motor (DC)

1. Check connector connection.
2. Check motor power supply voltage output (pins 1-4).
3. Check motor control voltage (pins 4-5).
4. Check rotation command voltage output (pins 4-6).
5. Check rotation pulse input (pins 4-7).

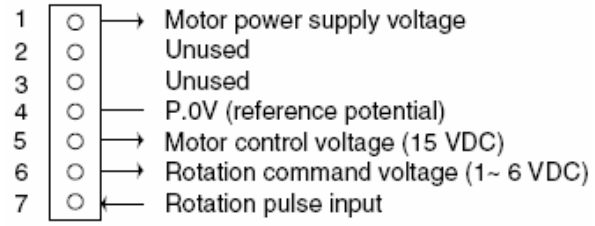

Notes: the a/c is electrifying, don't pull out or insert the terminals of the motor, else the motor would be damaged.

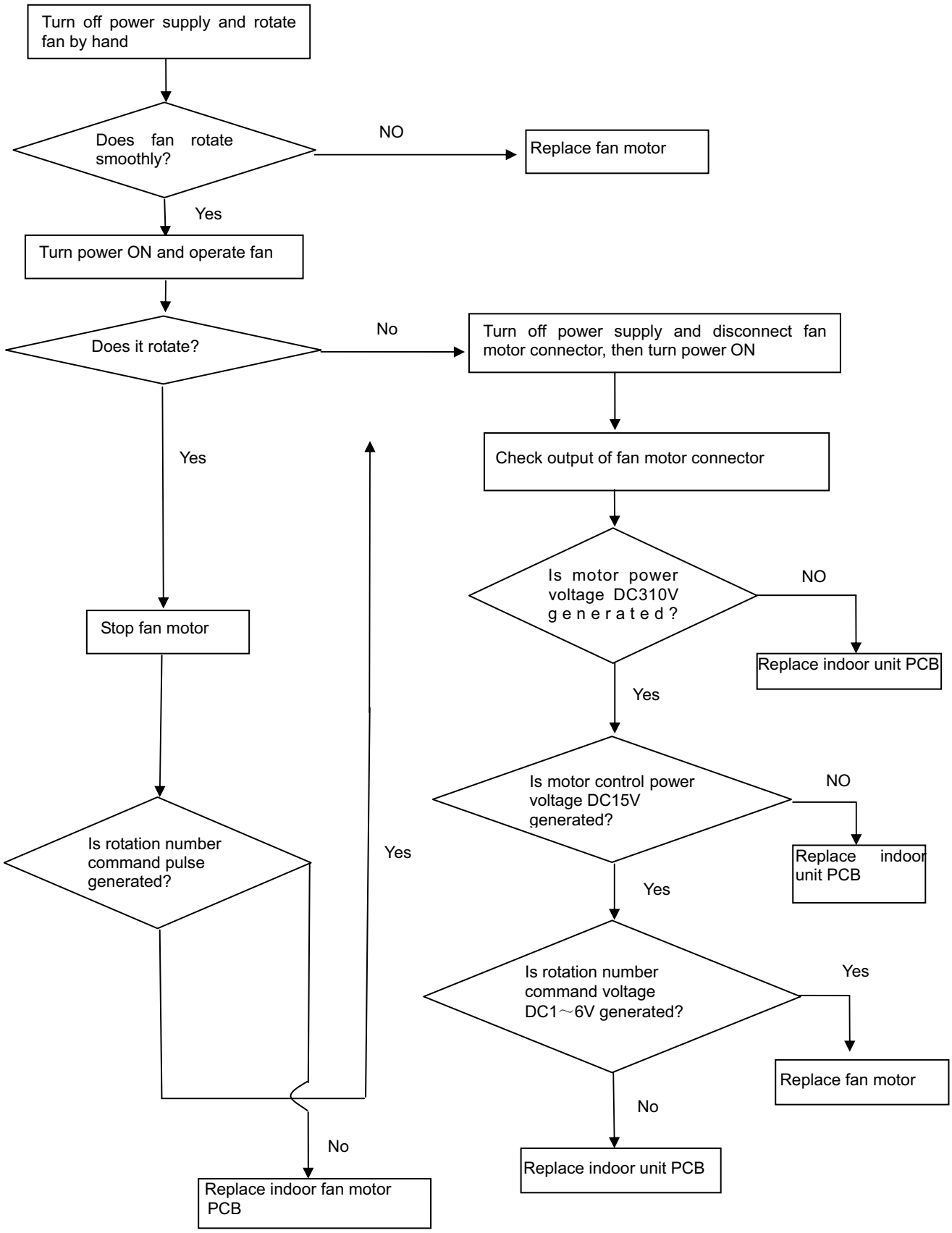
Turn off power supply and rotate fan by hand
Does fan rotate smoothly?
NO
Replace fan motor
Yes
Turn power ON and operate fan
Does it rotate?
No
Turn off power supply and disconnect fan motor connector, then turn power ON
Yes
Check output of fan motor connector
Is motor power voltage DC310V generated?
NO
Replace indoor unit PCB
Yes
Stop fan motor
Is motor control power voltage DC15V generated?
NO
Replace indoor unit PCB
Yes
Is rotation number command pulse generated?
Yes
Is rotation number command voltage DC1～6V generated?
Yes
Replace fan motor
No
No
Replace indoor fan motor PCB
Replace indoor unit PCB

11.4.4 Outdoor DC fan motor fault

Outdoor diplay	LED1 flash 9 times
Method of malfunction detection	DC fan motor is detected by checking the fan running condition and so on
Malfunction detection conditions	when the data of EEPROM is error or the EEPROM is damaged
Supposed causes	■DC fan motor protection dues to the DC fan motor faulty ■DC fan motor protection dues to faulty PCB
Troubleshooting	*** Caution** Be sure to turn off power switch before connect or disconnect connector, or parts damage may be occurred.

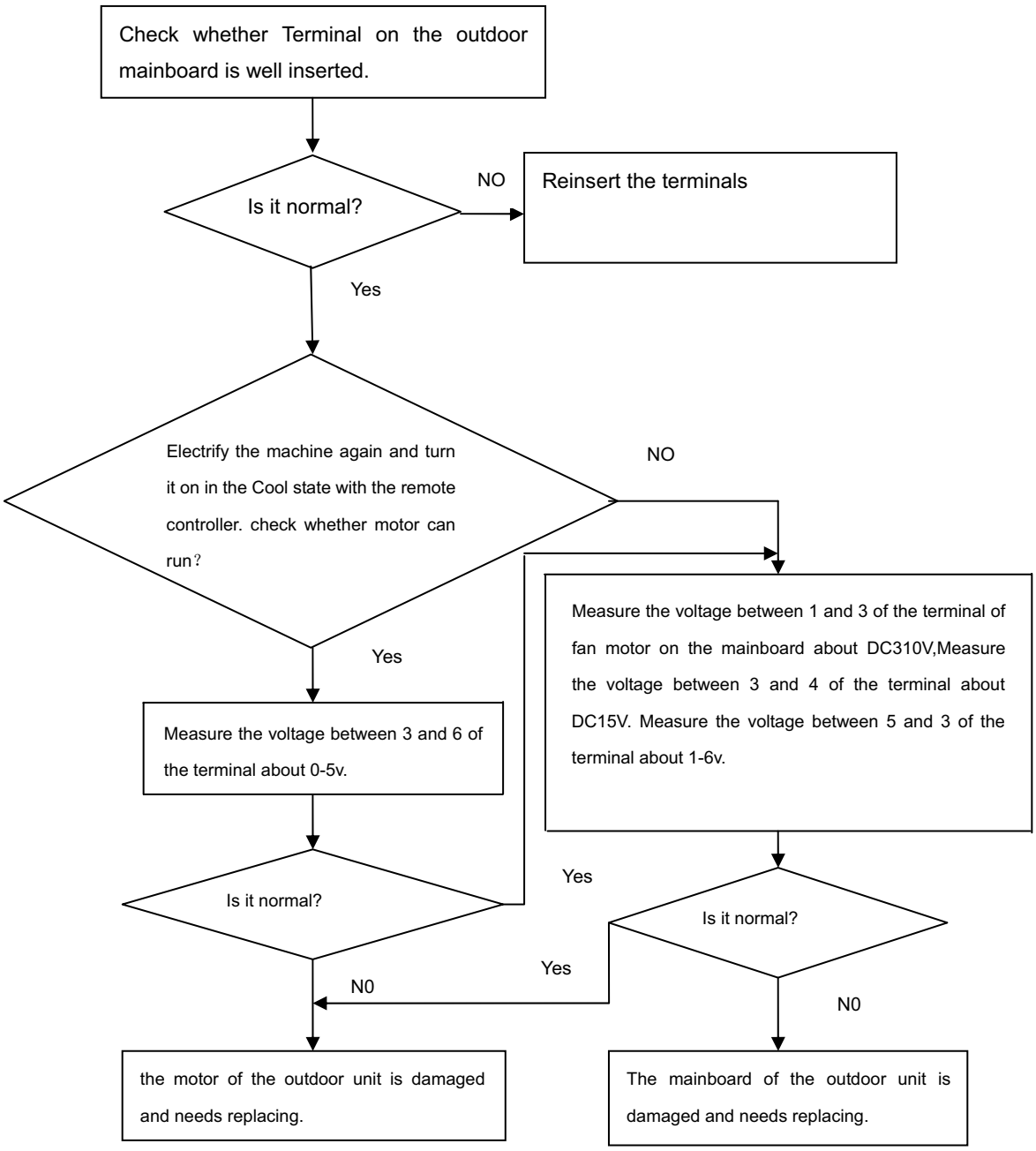

11.4.5 IPM protection

Outdoor diplay	LED1 flash 2 times
Method of malfunction detection	IPM protection is detected by checking the compressor running condition and so on
Malfunction detection conditions	■The system leads to IPM protection due to over current ■The compressor faulty leads to IPM protection ■circuit component of IPM is broken and led to IPM protection
Supposed causes	■IPM protection dues to the compressor faulty ■IPM protection dues to faulty PCB of IPM module ■Compressor wiring disconnected
Troubleshooting	*** Caution** Be sure to turn off power switch before connect or disconnect connector, or else parts damage may be occurred..

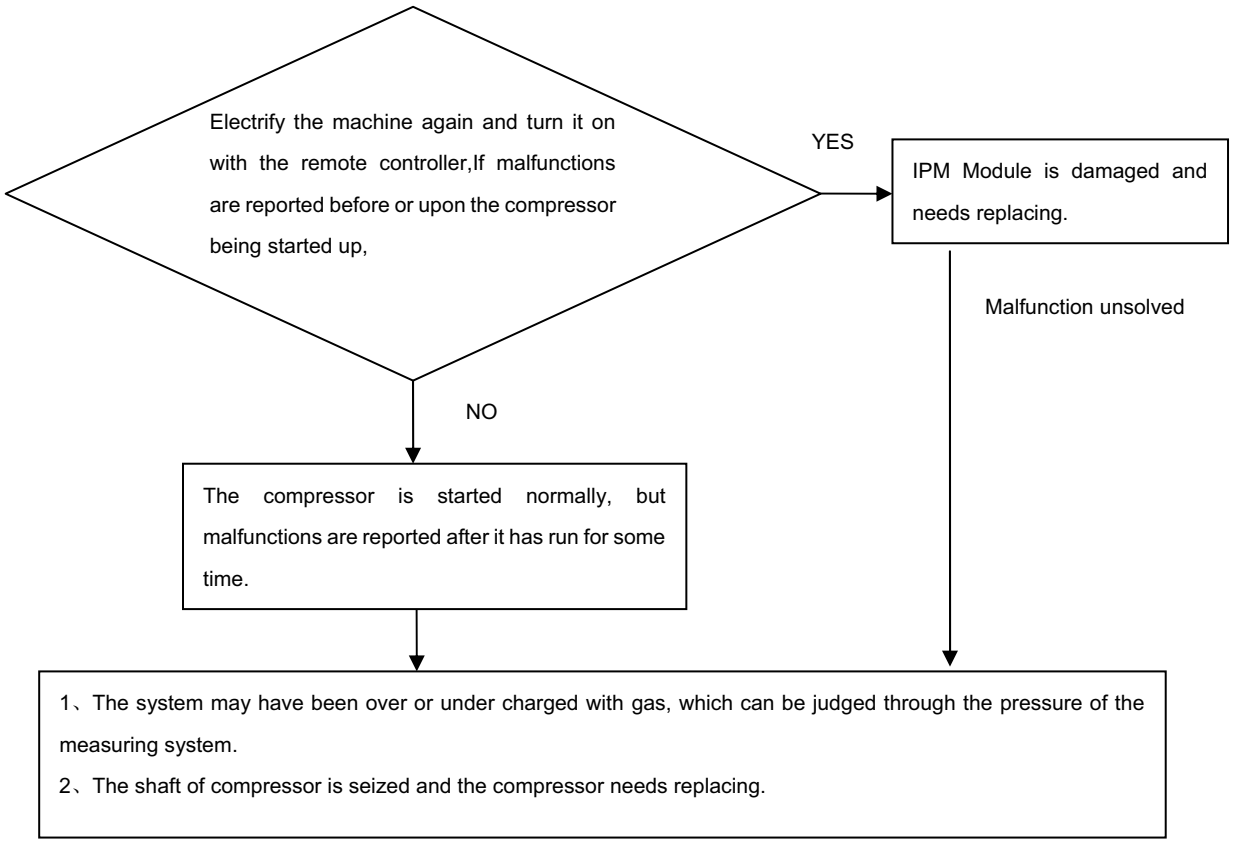

11.4.6 Over-current of the compressor

Outdoor diplay	LED1 flash 3 or 24 or 25 times
Method of malfunction detection	he current of the compressor is too high
Malfunction detection conditions	when the IPM Module is damaged or the compressor is damaged. power supply voltage is too low or too high
Supposed causes	■Faulty IPM Module ■ Faulty compressor ■Faulty power supply
Troubleshooting	*** Caution** Be sure to turn off power switch before connect or disconnect connector, or parts damage may be occurred...

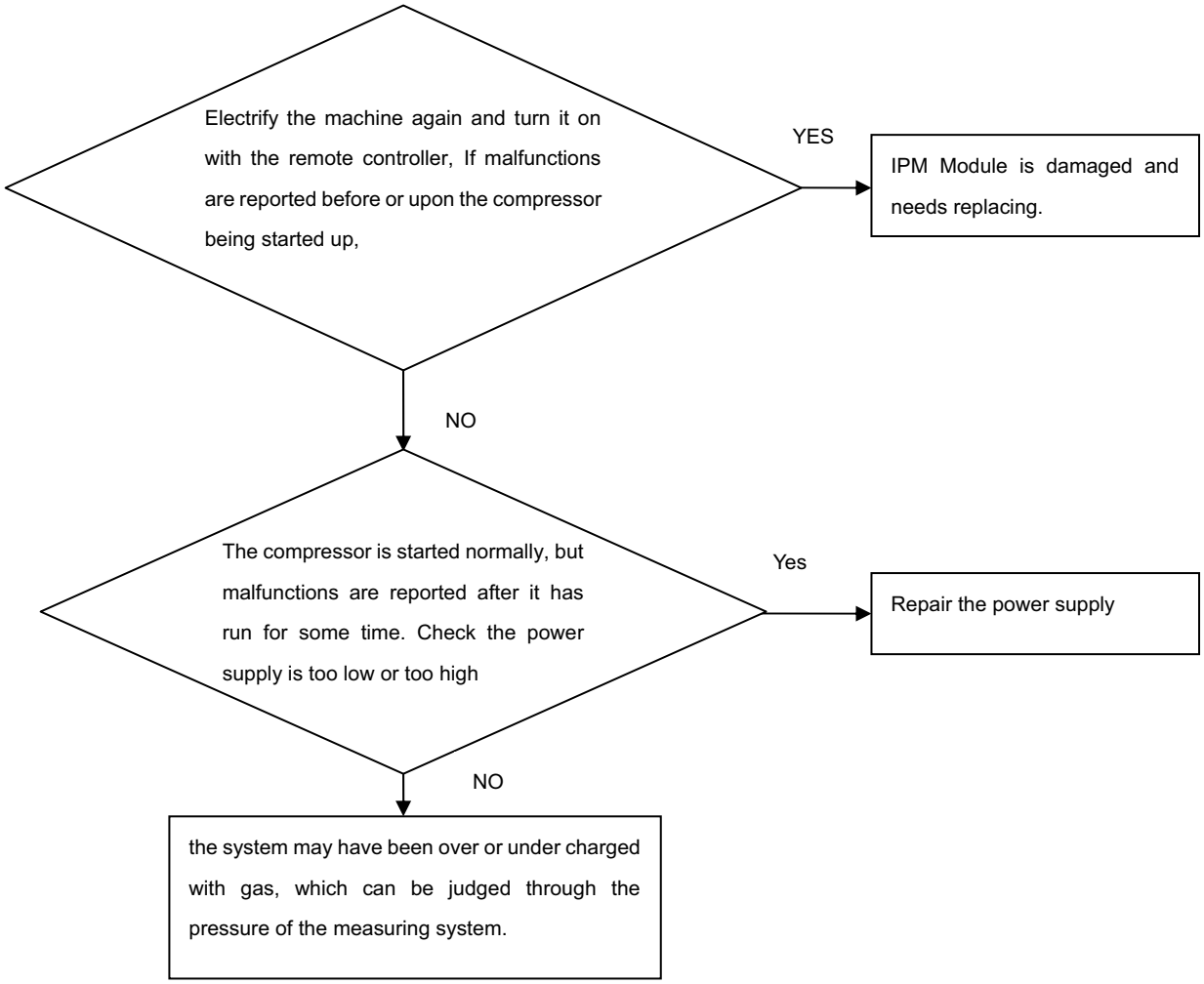

11.4.7 The communication fault between IPM and outdoor PCB

Outdoor diplay	LED1 flash 4 times
Method of malfunction detection	Communication is detected by checking the IPM module and the outdoor PCB
Malfunction detection conditions	■The outdoor PCB broken leads to communication fault ■The IPM module broken leads to communication fault
Supposed causes	■The outdoor PCB is broken ■The IPM module is broken ■Communication wiring disconnected
Troubleshooting	*** Caution** Be sure to turn off power switch before connect or disconnect connector, or else parts damage may be occurred

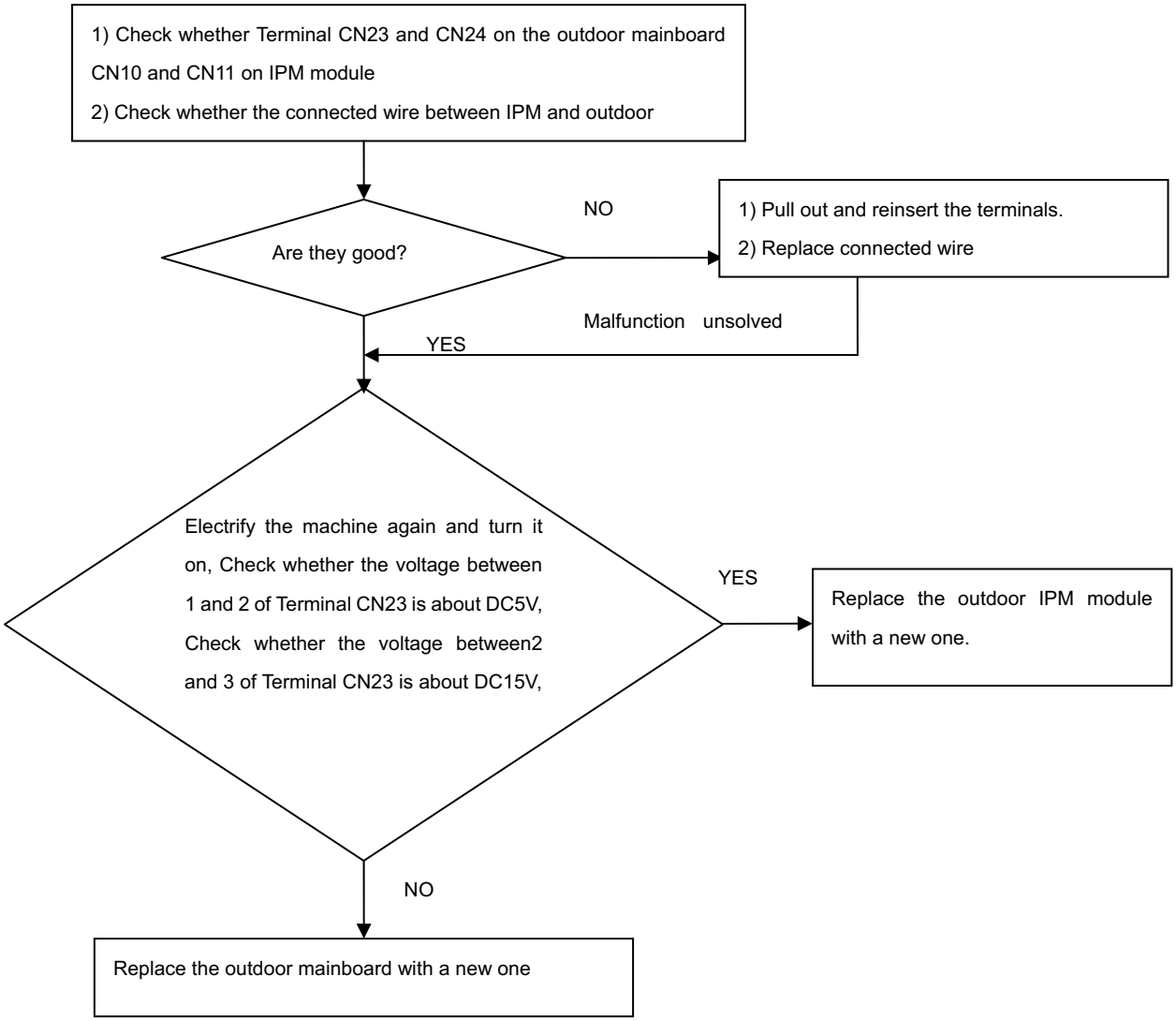

11.4.8 Power Supply Over or under voltage fault

Outdoor diplay	LED1 flash 6 times The power supply is over voltage
Method of malfunction detection	An abnormal voltage rise or fall is detected by checking the specified voltage detection
Malfunction detection conditions	An voltage signal is fed from the voltage detection circuit to the microcomputer
Supposed causes	■Supply voltage not as specified. ■The IPM module is broken. ■The outdoor PCB is broken.
Troubleshooting	*** Caution** Be sure to turn off power switch before connect or disconnect connector, or else parts damage may be occurred.

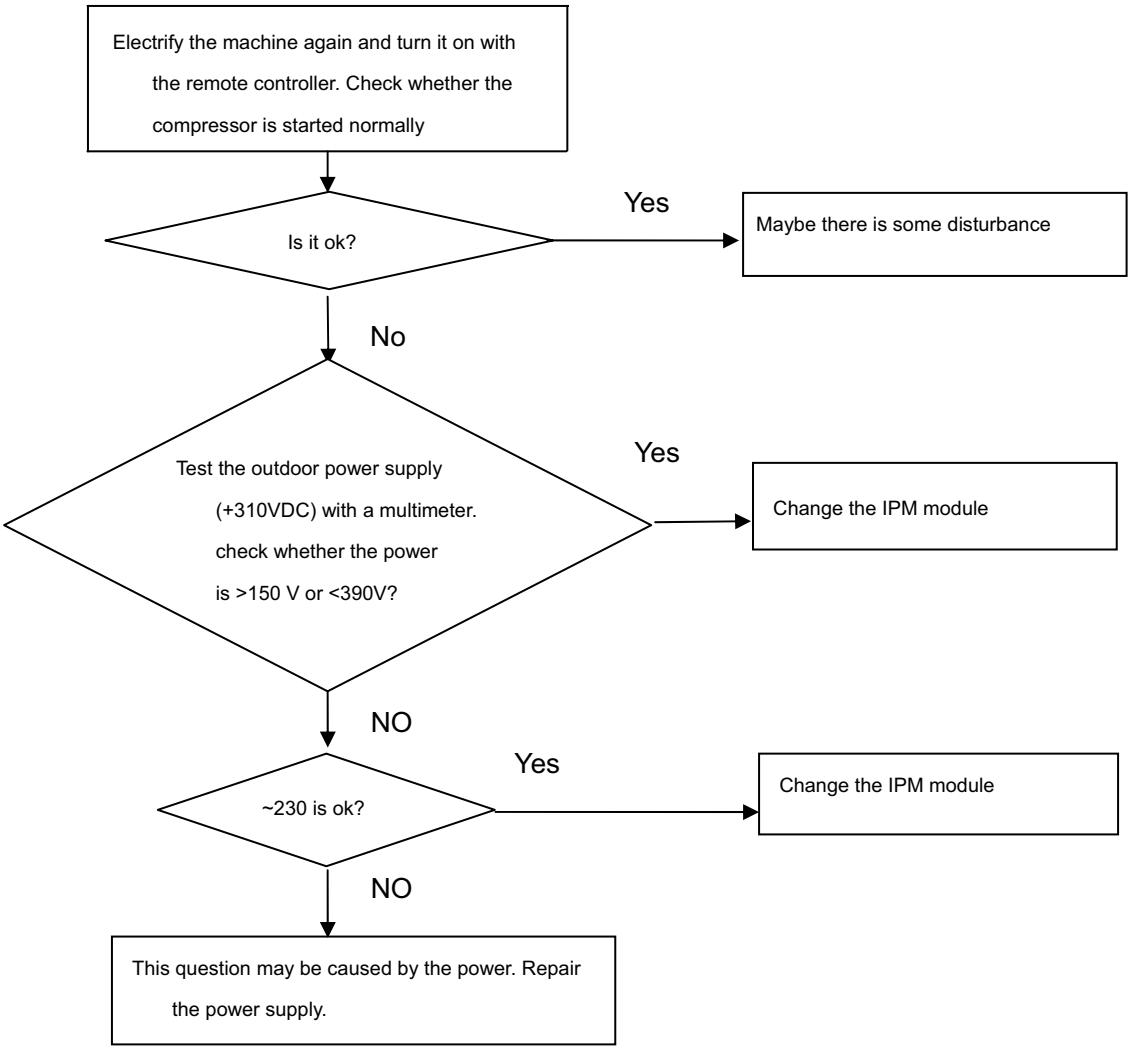

11.4.9 Overheat Protection For Discharge Temperature

Outdoor diplay	LED1 flash 8 times
Method of malfunction detection	The Discharge temperature control is checked with the temperature being detected by the Discharge pipe thermistor
Malfunction detection conditions	when the compressor discharge temperature is above 110℃
Supposed causes	■Electronic expansion valve defective ■Faulty thermistor ■Faulty PCB
Troubleshooting	*** Caution** Be sure to turn off power switch before connect or disconnect connector, or else parts damage may be occurred.

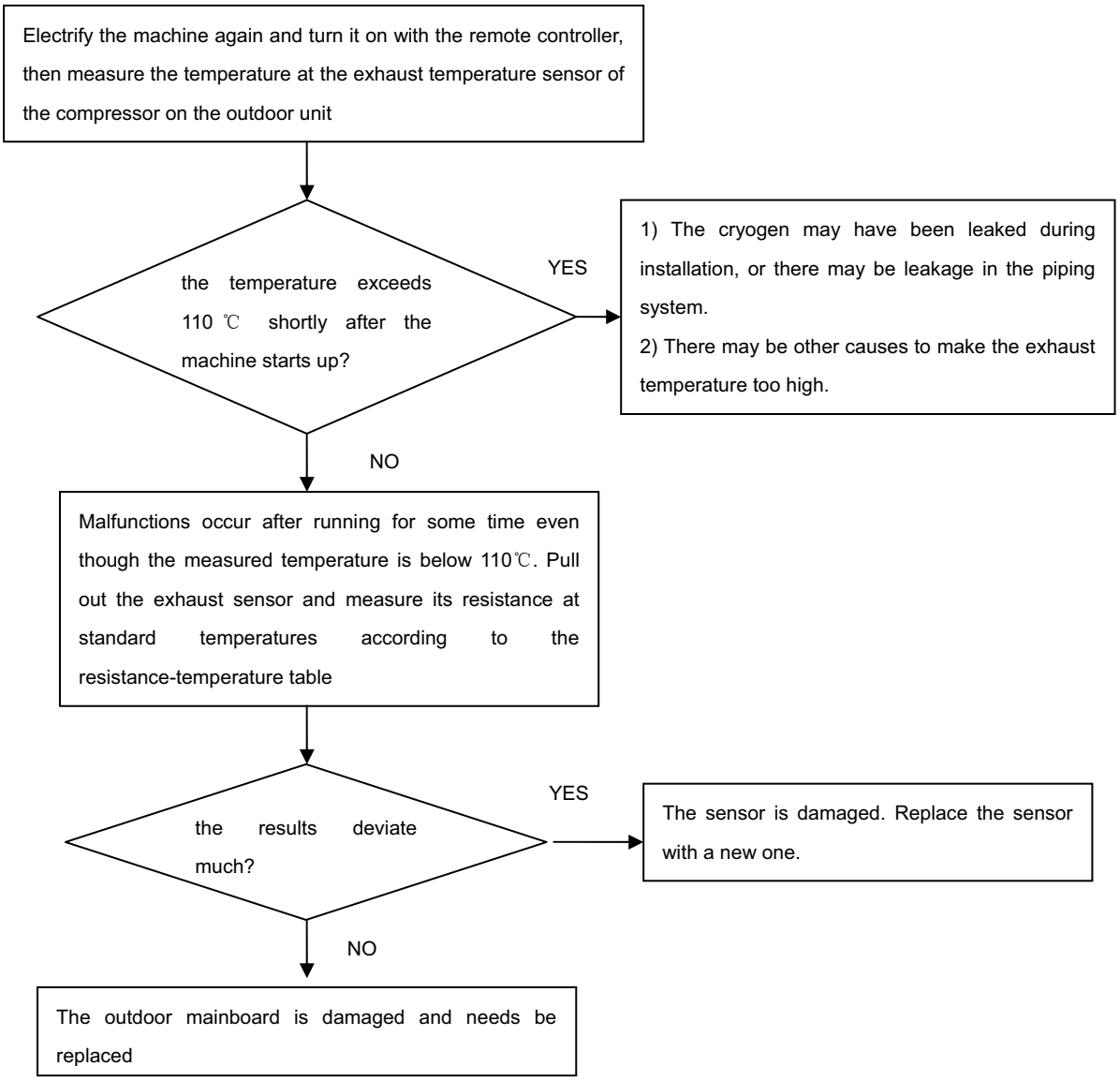

11.4.10 The communication fault between indoor and outdoor

indoor diplay Outdoor diplay	E7 LED1 flash 15 times
Method of malfunction detection	Communication is detected by checking the indoor PCB and the outdoor PCB
Malfunction detection conditions	■The outdoor PCB broken leads to communication fault ■The indoor PCB broken leads to communication fault
Supposed causes	■Communication wiring disconnected ■The indoor PCB is broken ■The outdoor PCB is broken ■The module PCB is broken
Troubleshooting	*** Caution** Be sure to turn off power switch before connect or disconnect connector, or else parts damage may be occurred.

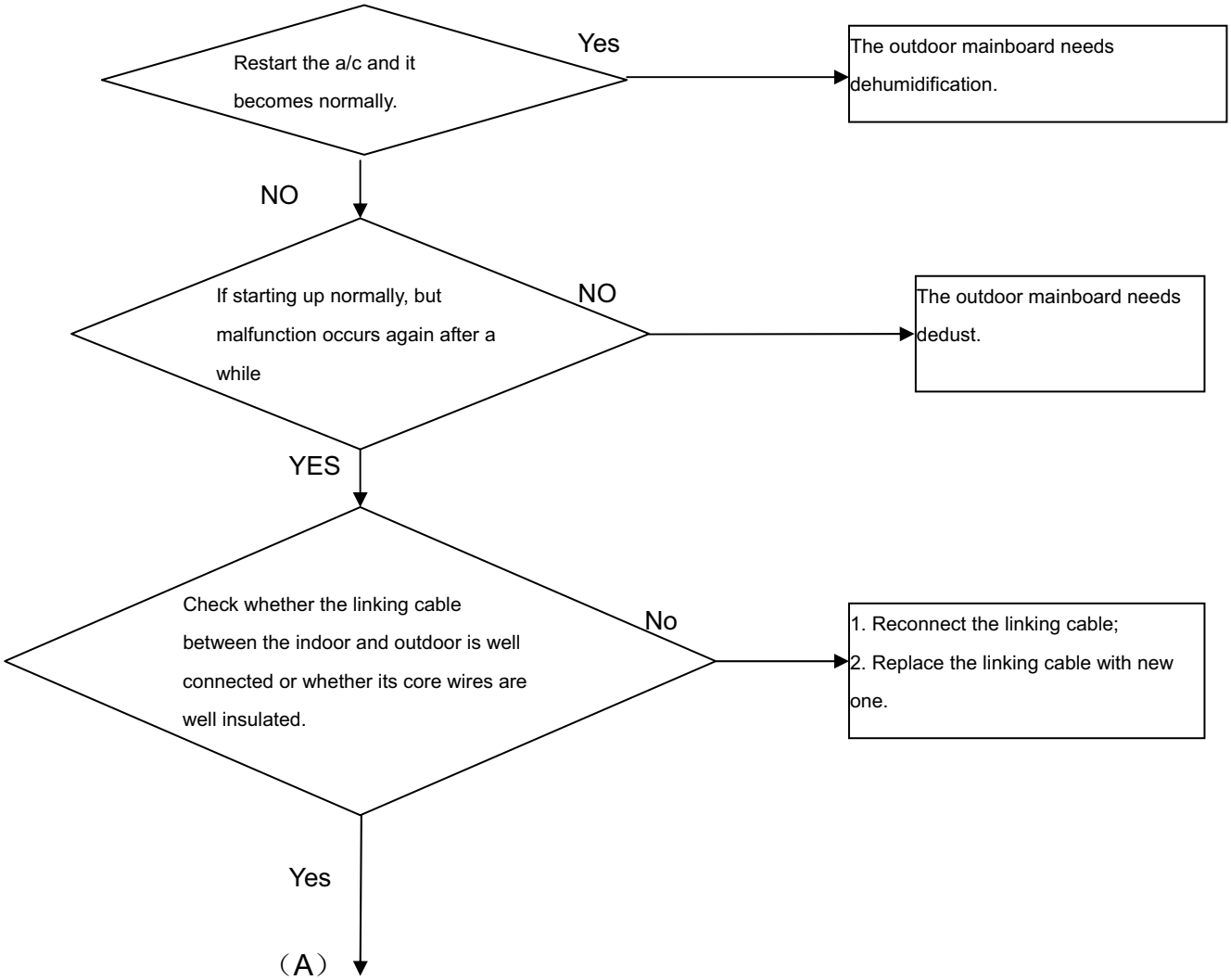

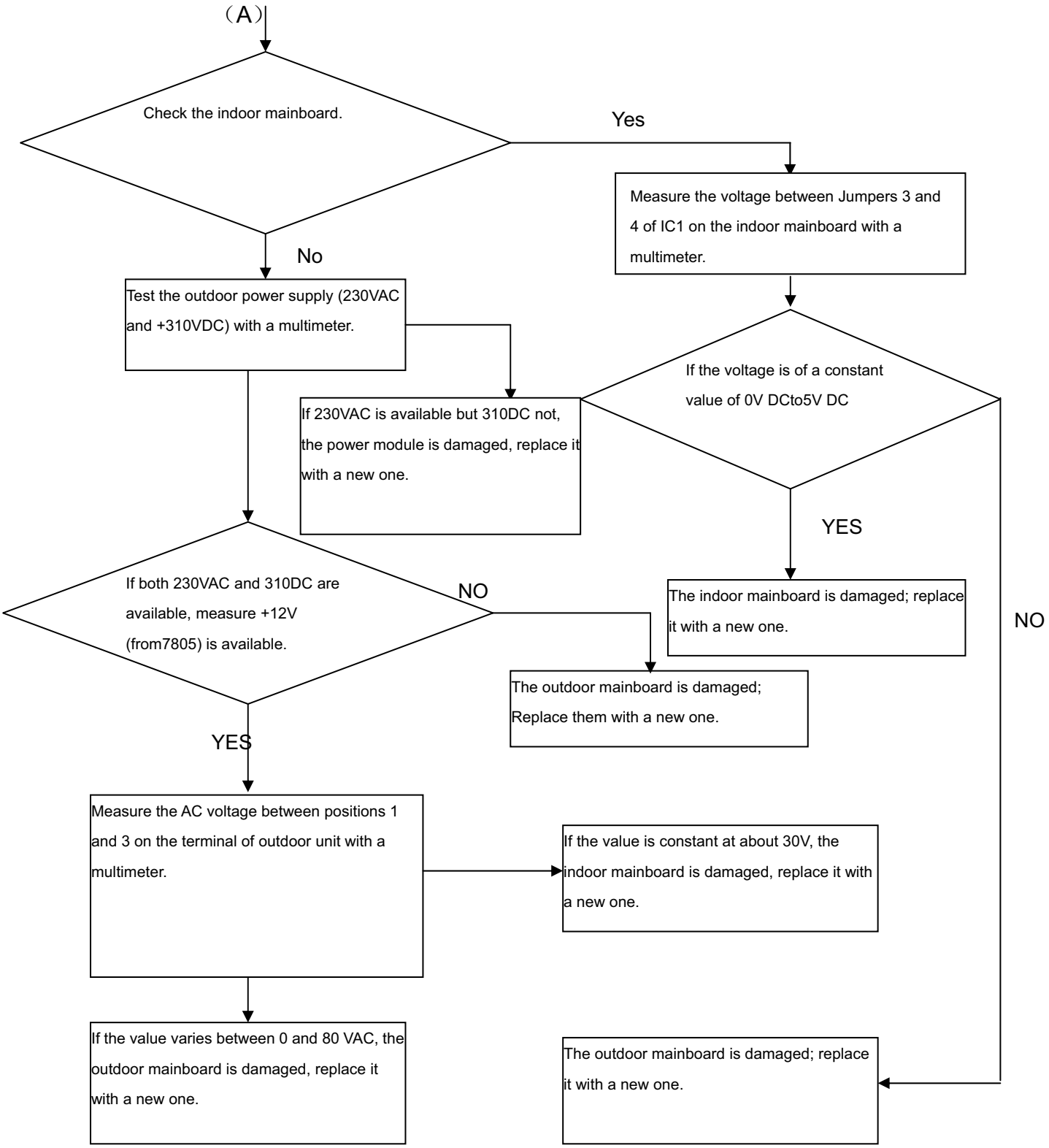
(A)
Check the indoor mainboard.
Yes
No
Measure the voltage between Jumpers 3 and 4 of IC1 on the indoor mainboard with a multimeter.
Test the outdoor power supply (230VAC and +310VDC) with a multimeter.
If the voltage is of a constant value of 0V DCto5V DC
If 230VAC is available but 310DC not, the power module is damaged, replace it with a new one.
YES
NO
The indoor mainboard is damaged; replace it with a new one.
If both 230VAC and 310DC are available, measure +12V (from7805) is available.
NO
The outdoor mainboard is damaged; Replace them with a new one.
YES
Measure the AC voltage between positions 1 and 3 on the terminal of outdoor unit with a multimeter.
If the value is constant at about 30V, the indoor mainboard is damaged, replace it with a new one.
If the value varies between 0 and 80 VAC, the outdoor mainboard is damaged, replace it with a new one.
The outdoor mainboard is damaged; replace it with a new one.

11.4.11 Loss of synchronism detection

Inverter side current detection is abnormal

Outdoor diplay	LED1 flash 18 times LED1 flash 19 times
Method of malfunction detection	The position of the compressor rotor can not detected normally
Malfunction detection conditions	when the wiring of compressor is wrong or the connection is poor; or the compressor is damaged
Supposed causes	■Faulty The wiring of compressor ■Faulty compressor ■Faulty PCB
Troubleshooting	*** Caution** Be sure to turn off power switch before connect or disconnect connector, or else parts damage may be occurred.

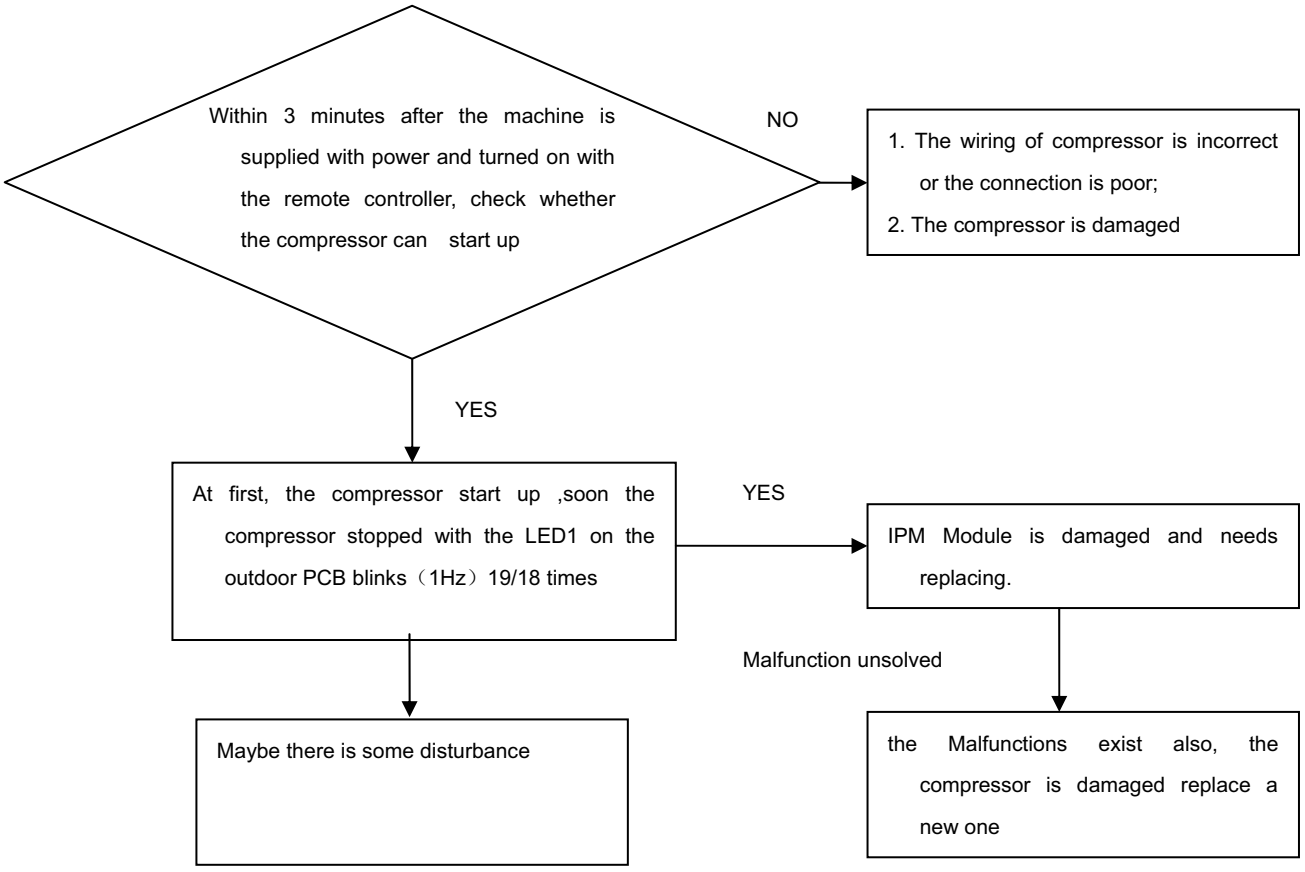

11.4.12 High work-intense protection

Outdoor diplay LED1 flash 21 times

Method of malfunction detection	High work-intense control is activated in the heating mode if the temperature being sensed by the heat exchanger thermistor exceeds the limit.
Malfunction detection conditions	Activated when the temperature being sensed by the heat exchanger rises above 65℃ twice in 30 minutes.
Supposed causes	■Faulty electronic expansion valve ■Dirty heat exchanger ■Faulty heat-exchange sensor ■Insufficient gas
Troubleshooting	*** Caution** Be sure to turn off power switch before connect or disconnect connector, or else parts damage may be occurred.

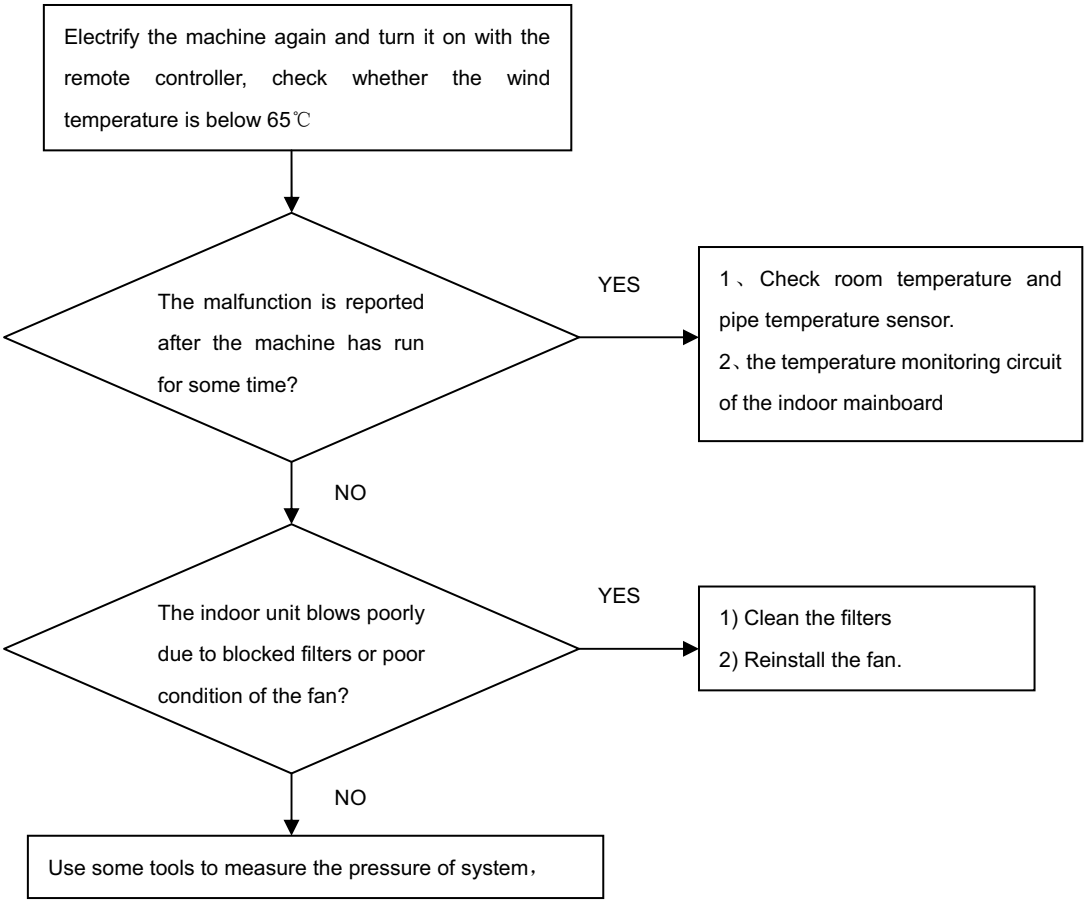

Circuit diagrams